LG AIR CONDITIONERS

PRODUCT DATA

Ceiling & Floor(50Hz, R22)
Ceiling Suspended(50Hz, R22)

5CSV2-03A

Replaces 5CSV2-02A

General Description

Thank you very much for your special patronage of LG air conditioners.

LG's "Ceiling & Floor" and "Ceiling Suspended" are meant both for Commercial and Residential applications.
The unit can be easily either mounted over ceiling & wall or kept on the floor.
This has a separate outdoor which facilitates split installation. The capacity ranges from 18k to 60k Btu/h.

The vertical flow direction of the cooling air can be controlled by remote control, and its low noise design allows quite and pleasant cooling.

Apart from common features, this unit offers some unique features CHAOS Swing, Auto Operation, Healthy Dehumidification, Auto Restart, Quiet Operation etc.

A lot of information regarding the design & installation of this system is provided in this publication. This new products series contains data on the same pattern.

Please utilize all the information for conducting your business efficiently.

Make sure the specification, dimension or others technical data are same as provided in enginering data book before you start the project.

We look forward to your continuing support.

LG Electronics Inc.

Air Conditioning Division

TABLE OF CONTENTS

Table of contents ***Page***

1. Models List

1.1 Cooling Only

Rated Capacity		Model		Power Supply
kW	kBtu/h	Refrigerant	Model Name	Ø, V, Hz
5.28	18	R22	LV-B1864CL	1Ø, 220-240V, 50Hz
7.03	24		LV-B2464CL	
8.21	28		LV-B2860CL	
10.6	36		LV-C3681CL	3Ø, 380-415V, 50Hz
			*LV-C368KLA(B)0	
			*LV-C368KLA1	
14.1	48		LV-D4881CL	
			*LV-C488LLA(B)0	
			*LV-C488LLA1	
17.6	60		LV-D6081CL	
			*LV-C608LLA(B)0	
			*LV-C608LLA1	

* : Ceiling suspended type.

LV-C****LA1 : Tropical model.

1.2 Heat Pump

Rated Capacity		Model		Power Supply
kW	kBtu/h	Refrigerant	Model Name	Ø, V, Hz
5.28	18	R22	LV-B1864H(B)L	1Ø, 220-240V, 50Hz
7.03	24		LV-B2464H(B)L	
8.21	28		LV-B2860HL	
10.6	36		LV-C3681HL	3Ø, 380-415V, 50Hz
			*LV-H368KLA(B)0	
14.1	48		LV-D4881HL	
			*LV-H488LLA(B)0	
17.6	60		LV-D6081HL	
			*LV-H608LLA(B)0	

* : Ceiling suspended type.

2. Model Number Nomenclature

2.1 Identification Rule 1

L V - B 2 4 6 4 H L

Option
L : Basic

Model Type
C : Cooling Only
H : Heat Pump
B : Heat Pump+Gold Fin

Development Sequence

Electrical Rating
6 : 1Ø, 220-240V, 50Hz
8 : 3Ø, 380-415V, 50Hz

Rated Capacity
Ex) 18 → 18,000 Btu/h 24 → 24,000 Btu/h
28 → 28,000 Btu/h 36 → 36,000 Btu/h
48 → 48,000 Btu/h 60 → 60,000 Btu/h

Chassis Name
B : VB Chassis
D : VD Chassis
C : VC Chassis

Type of Air Conditioner
LV : LG Ceiling & Floor Type Air Conditioner

2.2 Identification Rule 2

L V - C 3 6 8 K L A 0

Development Sequence
1 : Tropical model.

Function
A : Basic
B : Low Ambient Control

Look/Color
L : Basic

Chassis Name
K: VK Chassis
L : VL Chassis

Electrical Rating
8 : 3Ø, 380-415V, 50Hz

Rated Capacity
Ex) 36 → 36,000 Btu/h 42 → 42,000 Btu/h
48 → 48,000 Btu/h 60 → 60,000 Btu/h

Model Type
C : Cooling Only
H : Heat Pump

Type of Air Conditioner
LV : LG Ceiling Suspended Type Air Conditioner

Cooling, Heating & Fan Operation :

- LG Convertible air conditioners can provide cooling, heating & fan operation. In the cooling mode, it cools the air with an operation range of 18~30°C. In the heating mode, it heats the air with an operation range of 16~30°C. In the fan operation mode, only indoor fan at the selected speed will run, outdoor fan and compressor will be off.

Auto Restart Operation :

- When there is electricity failure the system shuts off. After resumption of the power, unit will start in the same set conditions prior to the power failure. Memorized condition are on / off condition, operating mode (cooling/heating), set temperature and fan speed.

Hot Start Function :

- During starting of the unit in the heating mode, it prevents cold air blown from the unit.It starts the indoor fan only after indoor unit pipe temperature reaches a preset value(28°C). When indoor unit pipe temperature has reached 28°C, then for initial 1 minute the indoor fan runs at low speed and after that at the set fan speed.

Wireless Remote Control :

- It provides ease of control.

Time Delay Safety Function :

- It delays restarting of the compressor by three minutes thereby preventing damage to the compressor .

Low Ambient Control :

- If the outdoor temperature drops below certain temperature, liquid back to the compressor is prevented by reducing outdoor fan speed. It can prevent frosting of evaporator and keep cooling operation on.

Energy Saving Gold Fin :

- Heat Exchanger fins are coated with anticorrosive & hydrophilic layers. It prevents the corrosion of heat exchanger. Fins remains as new even after long time operation and maintains its efficiency.
  It also saves power & maintenance cost.

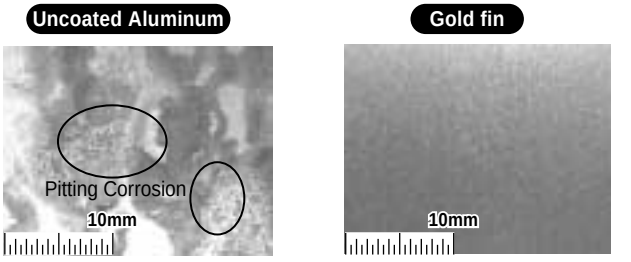

Salt Spray Test Result : After 360 hours
[Test Standard: ASTM B-117, KS D 9502]

4. List of Functions

Features \ Model	Ceiling & Floor					
	LV-B1864CL	**LV-B1864H(B)L**	**LV-B2464CL**	**LV-B2464H(B)L**	**LV-B2860CL**	**LV-B2860HL**
Air Discharge outlet	1	1	1	1	1	1
Airflow Direction control (left & right)	Manual	Manual	Manual	Manual	Manual	Manual
Airflow Direction control (up & down)	Auto	Auto	Auto	Auto	Auto	Auto
Airflow Steps(Fan / Cool /Heat)	3/3/-	3/3/3	3/3/-	3/3/3	3/3/-	3/3/3
Auto Changeover	-	-	-	-	-	-
Auto Operation	O	O	O	O	O	O
Auto Restart Operation	O	O	O	O	O	O
Auto Swing	O	O	O	O	O	O
Central Control	-	-	-	-	-	-
CHAOS wind (Auto wind)	O	O	O	O	O	O
Child Lock Function	-	-	-	-	-	-
Cooling & Fan Operation	O	-	O	-	O	-
Coolling, Heating & Fan Operation	-	O	-	O	-	O
Defrost / Deicing	-	O	-	O	-	O
Deodorizing Filter	-	-	-	-	-	-
Drain Pump	-	-	-	-	-	-
E.S.P. Control	-	-	-	-	-	-
Electric Heater	-	-	-	-	-	-
Energy Saving Gold Fin	Optional	Optional	Optional	Optional	Optional	Optional
Environment Friendly Refrigerant	-	-	-	-	-	-
Fire Alarm Function	-	-	-	-	-	-
Forced Operation	O	O	O	O	O	O
Group Control	-	-	-	-	-	-
High Ceiling Operation	-	-	-	-	-	-
Hot Start	-	O	-	O	-	O
Jet Cool	-	-	-	-	-	-
Low Ambient Control	Optional	Optional	Optional	Optional	Optional	Optional
Plasma Air Purifier	-	-	-	-	-	-
Prefilter(Washable / Anti-fungus)	O	O	O	O	O	O
Restart Delay (3-minutes)	O	O	O	O	O	O
Self Diagnosis	O	O	O	O	O	O
Sleep Mode	O	O	O	O	O	O
Soft Dry Operation	O	O	O	O	O	O
Comfort Operation With Swirl	-	-	-	-	-	-
Tele Control	-	-	-	-	-	-
Temperature Control	O	O	O	O	O	O
Test Function	-	-	-	-	-	-
Time Delay Safety Function	O	O	O	O	O	O
Timer (weekly)	-	-	-	-	-	-
Timer (24 hr On/Off)	O	O	O	O	O	O
Two Thermistor Control	-	-	-	-	-	-
Vane Control	-	-	-	-	-	-
Wired LCD Remote Controller	-	-	-	-	-	-
Wireless Remote Controller	O	O	O	O	O	O
Zero Standby Power	-	-	-	-	-	-
Zone Control	-	-	-	-	-	-

Notes :

O : Basic

Optional : Factory-Installed

Accessory : Field-Installed

- : Not available on this system

4. List of Functions

Features \ Model	Ceiling & Floor					
	LV-C3681CL	**LV-C3681HL**	**LV-D4881CL**	**LV-D4881HL**	**LV-D6081CL**	**LV-D6081HL**
Air Discharge outlet	1	1	1	1	1	1
Airflow Direction control (left & right)	Auto	Auto	Auto	Auto	Auto	Auto
Airflow Direction control (up & down)	Manual	Manual	Manual	Manual	Manual	Manual
Airflow Steps(Fan / Cool /Heat)	3/3/-	3/3/3	3/3/-	3/3/3	3/3/-	3/3/3
Auto Changeover	-	-	-	-	-	-
Auto Operation	O	O	O	O	O	O
Auto Restart Operation	O	O	O	O	O	O
Auto Swing	O	O	O	O	O	O
Central Control	-	-	-	-	-	-
CHAOS wind (Auto wind)	O	O	O	O	O	O
Child Lock Function	-	-	-	-	-	-
Cooling & Fan Operation	O	-	O	-	O	-
Coolling, Heating & Fan Operation	-	O	-	O	-	O
Defrost / Deicing	-	O	-	O	-	O
Deodorizing Filter	-	-	-	-	-	-
Drain Pump	-	-	-	-	-	-
E.S.P. Control	-	-	-	-	-	-
Electric Heater	-	-	-	-	-	-
Energy Saving Gold Fin	-	-	-	-	-	-
Environment Friendly Refrigerant	-	-	-	-	-	-
Fire Alarm Function	-	-	-	-	-	-
Forced Operation	O	O	O	O	O	O
Group Control	-	-	-	-	-	-
High Ceiling Operation	-	-	-	-	-	-
Hot Start	-	O	-	O	-	O
Jet Cool	-	-	-	-	-	-
Low Ambient Control	-	-	-	-	-	-
Plasma Air Purifier	-	-	-	-	-	-
Prefilter(Washable / Anti-fungus)	O	O	O	O	O	O
Restart Delay (3-minutes)	O	O	O	O	O	O
Self Diagnosis	-	-	-	-	-	-
Sleep Mode	O	O	O	O	O	O
Soft Dry Operation	-	-	-	-	-	-
Comfort Operation With Swirl	-	-	-	-	-	-
Tele Control	-	-	-	-	-	-
Temperature Control	O	O	O	O	O	O
Test Function	-	-	-	-	-	-
Time Delay Safety Function	O	O	O	O	O	O
Timer (weekly)	-	-	-	-	-	-
Timer (24 hr On/Off)	O	O	O	O	O	O
Two Thermistor Control	-	-	-	-	-	-
Vane Control	-	-	-	-	-	-
Wired LCD Remote Controller	-	-	-	-	-	-
Wireless Remote Controller	O	O	O	O	O	O
Zero Standby Power	-	-	-	-	-	-
Zone Control	-	-	-	-	-	-

Notes :

O : Basic

Optional : Factory-Installed

Accessory : Field-Installed

- : Not available on this system

4. List of Functions

Features	Ceiling Suspended			
	LV-C368KLA0(1)	LV-H368KLA0	LV-C368KLB0	LV-H368KLB0
Air Discharge outlet	1	1	1	1
Airflow Direction control (left & right)	Manual	Manual	Manual	Manual
Airflow Direction control (up & down)	Auto	Auto	Auto	Auto
Airflow Steps(Fan / Cool /Heat)	3/3/-	3/4/3	3/3/-	3/4/3
Auto Changeover	O	O	O	O
Auto Operation	O	O	O	O
Auto Restart Operation	O	O	O	O
Auto Swing	O	O	O	O
Central Control	-	-	-	-
CHAOS wind (Auto wind)	O	O	O	O
Child Lock Function	O	O	O	O
Cooling & Fan Operation	O	O	O	O
Coolling, Heating & Fan Operation	-	O	-	O
Defrost / Deicing	O	O	O	O
Deodorizing Filter	O	O	O	O
Drain Pump	-	-	-	-
E.S.P. Control	-	-	-	-
Electric Heater	-	-	-	-
Energy Saving Gold Fin	Optional	Optional	Optional	Optional
Environment Friendly Refrigerant	-	-	-	-
Fire Alarm Function	-	-	-	-
Forced Operation	O	O	O	O
Group Control	-	-	-	-
High Ceiling Operation	-	-	-	-
Hot Start	-	O	-	O
Jet Cool	O	O	O	O
Low Ambient Control	-	-	O	O
Plasma Air Purifier	-	-	-	-
Prefilter(Washable / Anti-fungus)	O	O	O	O
Restart Delay (3-minutes)	O	O	O	O
Self Diagnosis	O	O	O	O
Sleep Mode	O	O	O	O
Soft Dry Operation	O	O	O	O
Comfort Operation With Swirl	-	-	-	-
Tele Control	-	-	-	-
Temperature Control	O	O	O	O
Test Function	-	-	-	-
Time Delay Safety Function	O	O	O	O
Timer (weekly)	O	O	O	O
Timer (24 hr On/Off)	O	O	O	O
Two Thermistor Control	Accessary	Accessary	Accessary	Accessary
Vane Step Control	-	-	-	-
Wired LCD Remote Control	Accessary	Accessary	Accessary	Accessary
Wireless Remote Control	O	O	O	O
Zero Standby Power	O	O	O	O
Zone Control	-	-	-	-

Notes :
- O : Basic
- Optional : Factory-Installed
- Accessory : Field-Installed
- - : Not available on this system

4. List of Functions

Features	Ceiling Suspended			
	LV-C488LLA0(1)	LV-H488LLA0	LV-C488LLB0	LV-H488LLB0
Air Discharge outlet	1	1	1	1
Airflow Direction control (left & right)	Manual	Manual	Manual	Manual
Airflow Direction control (up & down)	Auto	Auto	Auto	Auto
Airflow Steps(Fan / Cool /Heat)	3/3/-	3/4/3	3/3/-	3/4/3
Auto Changeover	O	O	O	O
Auto Operation	O	O	O	O
Auto Restart Operation	O	O	O	O
Auto Swing	O	O	O	O
Central Control	-	-	-	-
CHAOS wind (Auto wind)	O	O	O	O
Child Lock Function	O	O	O	O
Cooling & Fan Operation	O	O	O	O
Coolling, Heating & Fan Operation	-	O	-	O
Defrost / Deicing	O	O	O	O
Deodorizing Filter	O	O	O	O
Drain Pump	-	-	-	-
E.S.P. Control	-	-	-	-
Electric Heater	-	-	-	-
Energy Saving Gold Fin	Optional	Optional	Optional	Optional
Environment Friendly Refrigerant	-	-	-	-
Fire Alarm Function	-	-	-	-
Forced Operation	O	O	O	O
Group Control	-	-	-	-
High Ceiling Operation	-	-	-	-
Hot Start	-	O	-	O
Jet Cool	O	O	O	O
Low Ambient Control	-	-	O	O
Plasma Air Purifier	-	-	-	-
Prefilter(Washable / Anti-fungus)	O	O	O	O
Restart Delay (3-minutes)	O	O	O	O
Self Diagnosis	O	O	O	O
Sleep Mode	O	O	O	O
Soft Dry Operation	O	O	O	O
Comfort Operation With Swirl	-	-	-	-
Tele Control	-	-	-	-
Temperature Control	O	O	O	O
Test Function	-	-	-	-
Time Delay Safety Function	O	O	O	O
Timer (weekly)	O	O	O	O
Timer (24 hr On/Off)	O	O	O	O
Two Thermistor Control	Accessary	Accessary	Accessary	Accessary
Vane Step Control	-	-	-	-
Wired LCD Remote Control	Accessary	Accessary	Accessary	Accessary
Wireless Remote Control	O	O	O	O
Zero Standby Power	O	O	O	O
Zone Control	-	-	-	-

4. List of Functions

Features	Ceiling Suspended			
	LV-C608LLA0(1)	LV-H608LLA0	LV-C608LLB0	LV-H608LLB0
Air Discharge outlet	1	1	1	1
Airflow Direction control (left & right)	Manual	Manual	Manual	Manual
Airflow Direction control (up & down)	Auto	Auto	Auto	Auto
Airflow Steps(Fan / Cool /Heat)	3/3/-	3/4/3	3/3/-	3/4/3
Auto Changeover	O	O	O	O
Auto Operation	O	O	O	O
Auto Restart Operation	O	O	O	O
Auto Swing	O	O	O	O
Central Control	-	-	-	-
CHAOS wind (Auto wind)	O	O	O	O
Child Lock Function	O	O	O	O
Cooling & Fan Operation	O	O	O	O
Coolling, Heating & Fan Operation	-	-	O	O
Defrost / Deicing	O	O	O	O
Deodorizing Filter	O	O	O	O
Drain Pump	-	-	-	-
E.S.P. Control	-	-	-	-
Electric Heater	-	-	-	-
Energy Saving Gold Fin	Optional	Optional	Optional	Optional
Environment Friendly Refrigerant	-	-	-	-
Fire Alarm Function	-	-	-	-
Forced Operation	O	O	O	O
Group Control	-	-	-	-
High Ceiling Operation	-	-	-	-
Hot Start	-	-	O	O
Jet Cool	O	O	O	O
Low Ambient Control	-	-	O	O
Plasma Air Purifier	-	-	-	-
Prefilter(Washable / Anti-fungus)	O	O	O	O
Restart Delay (3-minutes)	O	O	O	O
Self Diagnosis	O	O	O	O
Sleep Mode	O	O	O	O
Soft Dry Operation	O	O	O	O
Comfort Operation With Swirl	-	-	-	-
Tele Control	-	-	-	-
Temperature Control	O	O	O	O
Test Function	-	-	-	-
Time Delay Safety Function	O	O	O	O
Timer (weekly)	O	O	O	O
Timer (24 hr On/Off)	O	O	O	O
Two Thermistor Control	Accessary	Accessary	Accessary	Accessary
Vane Step Control	-	-	-	-
Wired LCD Remote Control	Accessary	Accessary	Accessary	Accessary
Wireless Remote Control	O	O	O	O
Zero Standby Power	O	O	O	O
Zone Control	-	-	-	-

Notes :
- O : Basic
- Optional : Factory-Installed
- Accessory : Field-Installed
- - : Not available on this system

5. Specifications

Item			Unit	LV-B1864CL	LV-B1864H(B)L	LV-B2464CL	LV-B2464H(B)L
General	Cooling Capacity		kcal/h(W)	4536(5275)	4788(5568)	6048(7033)	6048(7033)
			Btu/h	18,000	19,000	24,000	24,000
	Heating Capacity		kcal/h(W)	-	5040(5861)	-	6048(7033)
			Btu/h	-	20,000	-	24,000
	Input	Cooling/Heating	W	1850/-	1850/1850	2450/-	2670/2570
	Running Current	Cooling/Heating	A	9.2/-	9.2/9.2	11.5/-	12.3/11.9
	Starting Current	Cooling/Heating	A	45/-	45/45	67/-	45/45
	Power Supply		ø,V,Hz	1,220~240,50	1,220~240,50	1,220-240,50	1,220~240,50
	Power Factor		%	91.3	91.3	92.3	97
	E.E.R	Cooling	kcal/h W(W/W)	2.45(2.85)	2.59(3.01)	2.47(2.87)	2.27(2.63)
			Btu/h W	9.73	10.27	9.8	8.99
	C.O.P	Heating	kcal/h W(W/W)	-	2.72(3.17)	-	2.35(2.74)
			Btu/h W	-	10.81	-	9.34
	Setting temperature range(cool/heat)			18~30/-	18~30/16~30	18~30/-	18~30/16~30
	Dehumidification Rate		l/h	2.5	2.5	3.5	3.5
	Refrigerant Control			Capillary Tube	Capillary Tube	Capillary Tube	Capillary Tube
	Refrigerant charge		g(oz), type	1050(37.0),R22	1280(45.1),R22	1500(53.0),R22	1390(49.0),R22
Indoor	Indoor fan motor	Output	w	30	30	35	35
		Model		IC-9430LGCG	IC-9430LGCG	IC-9430LGCE	IC-9430LGCE
		No. of Poles		4	4	4	4
		Input	W	53	53	63	63
		Running Current	A	0.23	0.23	0.27	0.27
		Capacitor	µF/Vac	1.5/370	1.5/370	1.5/370	1.5/370
	Indoor Fan	Type		Cross Flow Fan	Cross Flow Fan	Cross Flow Fan	Cross Flow Fan
		No. Used / Diameter	EA/inch(mm)	1/3.1(80)	1/3.1(80)	1/3.1(80)	1/3.1(80)
		Motor Step		3	3	3	3
	Indoor Fan RPM	Cooling(H/M/L)	rpm	1090/990/890	1090/990/890	1160/1060/960	1160/1060/960
		Heating(H/M/L)	rpm	-	1090/990/890	-	1160/1060/960
	Air Circulation	Indoor (H/M/L)	CMM(CFM)	13.5(477)	13.5(477)	15(530)	15(530)
	Noise Level(Sound Press,1m)	Indoor(H/M/L)	dB(A)±3	43/40/37	43/40/37	45/42/39	45/42/39
	Temperature Controller			Thermistor	Thermistor	Thermistor	Thermistor
	Indoor Coil	Tube Size (OD)	inch(mm)	0.275(7)	0.275(7)	0.275(7)	0.275(7)
		Fins per inch		18	18	20	20
		No. of Rows & Column		2R 12C	2R 12C	2R 14C	2R 14C
	Dimensions (W*H*D)	Indoor	inch(mm)	47.24*24.21*8.07(1200*615*205)	47.24*24.21*8.07(1200*615*205)	47.24*24.21*8.07(1200*615*205)	47.24*24.21*8.07(1200*615*205)
	Net Weight	indoor	kg(lbs)	30(66.1)	30(66.1)	30(66.1)	30(66.1)
Outdoor	Compressor	Locked Rotor Amp.	A	45	45	63	67
		Type		Rotary	Rotary	Rotary	Reciprocating
		Quantity	No	1	1	1	1
		Model		2JS318G3AB02	2JS318G3AB02	2J44S235A1A	AWG5532EXC
		Maker		Matsushita	Matsushita	Matsushita	Tecumseh
		Capacity	Btu/h	19480	19480	27041	25496
		Motor Type		PSC	PSC	PSC	PSC
		Motor Input	W	1885	1885	2615	2660
		Oil Type		SUNISO 4GS	SUNISO 4GS	AT MOS M60	WITCO LP200
		Oil Charge	cc	1130	1130	1130	750
		O.L.P Type(model name)		Internal	Internal	Internal	Internal
	Outdoor Coil	Tube Size (OD)	inch(mm)	0.375(9.52)	0.275(7)	0.275(7)	0.275(7)
		Fins per inch		17	18	18	18
		No. of Rows & Column		1R 24C	2R 28C	2R 28C	2R 28C
	Outdoor fan motor	Output	W	90	90	61	90
		Model		IC-1640LGFD	IC-1640LGFD	IC-1640LGFA	IC-1640LGFD
		No. of Poles		6	6	6	6
		Input	W	170	170	137	170
		Running Current	A	0.72	0.72	0.62	0.72
		Capacitor	µF/Vac	6/370	6/370	6/370	6/370
	Outdoor Fan	Type		Propeller	Propeller	Propeller	Propeller
		No. Used / Diameter	EA/mm	1/460	1/460	1/460	1/460
		Discharge	Side/Top	Side Discharge	Side Discharge	Side Discharge	Side Discharge
		Speed	rpm	850	850	800	850
	Air Circulation	Outdoor	CMM(CFM)	45(1589)	45(1589)	45(1589)	50(1766)
	Noise Level(Sound Press,1m)	Outdoor	dB(A)±3	53	53	55	55
	SVC Valve	Liquid	inch(mm)	1 / 4 (6.35)	1 / 4 (6.35)	1 / 4 (6.35)	1 / 4 (6.35)
		Gas	inch(mm)	1 / 2 (12.7)	1 / 2 (12.7)	5 / 8 (15.88)	5 / 8 (15.88)
	Dimensions (W*H*D)	Outdoor	inch(mm)	34.2*25.8*12.6(870*655*320)	34.2*25.8*12.6(870*655*320)	34.2*25.8*12.6(870*655*320)	34.2*25.8*12.6(870*655*320)
	Net Weight	Outdoor	kg(lbs)	58(127.8)	60(132.2)	58(127.8)	60(132.2)
Other	Power Supply Cable		No.* mm²	2*2.0	2*2.0	2*2.0	2*2.0
	Connecting Cable		No.* mm²	2*2.0	(2*2.0)+(2*0.75)	2*2.0	(2*2.0)+(2*0.75)
	Connecting Tube(Ø. Socket Flare)	Liquid Side	inch(mm)	1 / 4 (6.35)	1 / 4 (6.35)	1 / 4 (6.35)	1 / 4 (6.35)
		Gas Side	inch(mm)	1 / 2 (12.7)	1 / 2 (12.7)	5 / 8 (15.88)	5 / 8 (15.88)
		Length, std	m	7.5	7.5	7.5	7.5
		Max length/elevation	m	15/8	15/8	20/8	20/8
	Drain hose(Inner ø)	Indoor Unit/Outdoor Unit	mm	Ø17/-	Ø17/32	Ø17/-	Ø17/32
	Packing Dimension	Indoor(W*H*D)	inch(mm)	50.8*27.4*11.4(1290*696*290)	50.8*27.4*11.4(1290*696*290)	50.8*27.4*11.4(1290*696*290)	50.8*27.4*11.4(1290*696*290)
		Outdoor(W*H*D)	inch(mm)	40.1*28.1*17.3(1020*715*440)	40.1*28.1*17.3(1020*715*440)	40.1*28.1*17.3(1020*715*440)	40.1*28.1*17.3(1020*715*440)
	Stuffing Quantity	With(Without) S/Parts	20/40ft	46/96	46/96	46/96	46/96

Notes: 1. Capacities are based on the following conditions:

Cooling:
- Indoor Temperature 27°C(80.6°F) DB /19°C(66.2°F) WB
- Outdoor Temperature 35°C(95°F) DB /24°C(75.2°F) WB
- Interconnecting Piping Length 7.5m
- Level Difference of Zero.

Heating:
- Indoor Temperature 20°C(68°F) DB / 15°C(59°F) WB
- Outdoor Temperature 7°C(44.6°F) DB / 6°C(42.8°F) WB
- Interconnecting Piping Length 7.5 m
- Level Difference of Zero.

2. Capacities are Net Capacities.
3. Due to our policy of innovation some specifications may be changed without notification.

5. Specifications

	Item		Unit	LV-B2860CL	LV-B2860HL	LV-C3681CL	LV-C3681HL
General	Cooling Capacity		kcal/h(W)	7056(8206)	7056(8206)	9072(10551)	9072(10551)
			Btu/h	28,000	28,000	36,000	36,000
	Heating Capacity		kcal/h(W)	-	7056(8206)	-	9072(10551)
			Btu/h	-	28,000	-	36,000
	Input	Cooling/Heating	W	2850/-	2850/2850	2810/-	3,100/2,900
	Running Current	Cooling/Heating	A	13.5/-	13.5/13.5	9.36/-	5.4/5.4
	Starting Current	Cooling/Heating	A	85/-	85/85	46/-	46/46
	Power Supply		ø,V,Hz	1,220~240,50	1,220~240,50	3,380~415,50	3,380~415,50
	Power Factor		%	98	98	98	98
	E.E.R	Cooling	kcal/h W(W/W)	2.48(2.88)	2.48(2.88)	3.23(3.75)	2.93(3.40)
			Btu/h W	9.82	9.82	12.81	11.61
	C.O.P	Heating	kcal/h W(W/W)	-	2.48(2.88)	-	3.13(3.64)
			Btu/h W	-	9.82	-	12.41
	Setting temperature range(cool/heat)			18~30/-	18~30/16~30	18~30/-	18~30/16~30
	Dehumidification Rate		l/h	4	4	3.67	2.92
	Refrigerant Control			Capillary Tube	Capillary Tube	Capillary Tube	Capillary Tube
	Refrigerant charge		g(oz), type	1520(53.6),R22	1960(69.1),R22	3400(120.0),R22	3600(127.0),R22
Indoor	Indoor fan motor	Output	w	40	40	50*2	50*2
		Model		IC-9430LGCL	IC-9430LGCL	F2-1/15 TY	F2-1/15 TY
		No. of Poles		4	4	4	4
		Input	W	81	81	92*2	92*2
		Running Current	A	0.36	0.36	0.37*2	0.37*2
		Capacitor	µF/Vac	1.5/370	1.5/370	2.5/400	2.5/400
	Indoor Fan	Type		Cross Flow Fan	Cross Flow Fan	Centrifugal Blower	Centrifugal Blower
		No. Used / Diameter	EA/inch(mm)	1/3.1(80)	1/3.1(80)	4/5.7(144)	4/5.7(144)
		Motor Step		3	3	3	3
	Indoor Fan RPM	Cooling(H/M/L)	rpm	1280/1180/1080	1280/1180/1080	1200/1000/800	1200/1000/800
		Heating(H/M/L)	rpm	-	1280/1180/1080	-	1200/1000/800
	Air Circulation	Indoor (H/M/L)	CMM(CFM)	18(636)	18(636)	27.8/22.4/17.0 (982/791/600)	25/23/21 (883/812/742)
	Noise Level(Sound Press,1m)	Indoor(H/M/L)	dB(A)±3	50/48/46	50/48/46	51/48/42	51/48/45
	Temperature Controller			Thermistor	Thermistor	Thermistor	Thermistor
	Indoor Coil	Tube Size (OD)	inch(mm)	0.275(7)	0.275(7)	0.375(9.52)	0.375(9.52)
		Fins per inch		20	20	14	14
		No. of Rows & Column		2R 14C	2R 14C	3R 10C	3R 10C
	Dimensions (W*H*D)	Indoor	inch(mm)	47.24*24.21*8.07(1200*615*205)	47.24*24.21*8.07(1200*615*205)	63.19*27.48*9.25 (1605*698*235)	63.19*27.48*9.25 (1605*698*235)
	Net Weight	indoor	kg(lbs)	30(66.1)	30(66.1)	65(143.3)	65(143.3)
Outdoor	Compressor	Locked Rotor Amp.	A	85	85	46	46
		Type		Reciprocating	Reciprocating	Scroll	Scroll
		Quantity	No	1	1	1	1
		Model		H25B35QABHA	H25B35QABHA	ZR68KC TFD	ZR68KC TFD
		Maker		Bristol	Bristol	Copeland	Copeland
		Capacity	Btu/h	30300	30300	34601	34601
		Motor Type		PSC	PSC	-	-
		Motor Input	W	2830	2830	3090	3090
		Oil Type		SUNISO 3GS	SUNISO 3GS	WHITE OIL SONTEX 200 LT	WHITE OIL SONTEX 200 LT
		Oil Charge	cc	1701	1701	1242	1242
		O.L.P Type(model name)		Internal	Internal	Internal	Internal
	Outdoor Coil	Tube Size (OD)	inch(mm)	0.275(7)	0.275(7)	0.375(9.52)	0.375(9.52)
		Fins per inch		18	18	16	16
		No. of Rows & Column		2R 28C	2R 36C	2R 36C	2R 36C
	Outdoor fan motor	Output	W	90	90	149	149
		Model		IC-1640LGFD	IC-1640LGFD	CB1-1/5TT-FG	CB1-1/5TT-FG
		No. of Poles		6	6	6	6
		Input	W	170	170	295	295
		Running Current	A	0.72	0.72	1.56	1.56
		Capacitor	µF/Vac	6/370	6/370	7.5/400	7.5/400
	Outdoor Fan	Type		Propeller	Propeller	Propeller	Propeller
		No. Used / Diameter	EA/mm	1/460	1/460	1/508	1/508
		Discharge	Side/Top	Side Discharge	Side Discharge	Side Discharge	Side Discharge
		Speed	rpm	850	850	900	900
	Air Circulation	Outdoor	CMM(CFM)	58(2048)	58(2048)	62(2200)	62(2200)
	Noise Level(Sound Press,1m)	Outdoor	dB(A)±3	57	57	62	63
	SVC Valve	Liquid	inch(mm)	3 / 8 (9.52)	3 / 8 (9.52)	3/8(9.52)	3/8(9.52)
		Gas	inch(mm)	5 / 8 (15.88)	5 / 8 (15.88)	3/4(19.05)	3/4(19.05)
	Dimensions (W*H*D)	Outdoor	inch(mm)	34.2*25.8*12.6(870*655*320)	34.2*31.5*12.6(870*800*320)	37.4*37.4*14.6(950*950*370)	37.4*37.4*14.6(950*950*370)
	Net Weight	Outdoor	kg(lbs)	60(132.2)	62(136.7)	85(187)	85(187)
Other	Power Supply Cable		No.* mm²	2*3.0	2*3.0	5*4.0	5*4.0
	Connecting Cable		No.* mm²	3*0.75	4*0.75	6*1.0	6*1.0
	Connecting Tube(Ø. Socket Flare)	Liquid Side	inch(mm)	3 / 8 (9.52)	3 / 8 (9.52)	3/8(9.52)	3/8(9.52)
		Gas Side	inch(mm)	5 / 8 (15.88)	5 / 8 (15.88)	3/4(19.05)	3/4(19.05)
		Length, std	m	7.5	7.5	5	5
		Max length/elevation	m	25/10	25/10	20/10	20/10
	Drain hose(Inner ø)	Indoor Unit/Outdoor Unit	mm	Ø17/-	Ø17/32	Ø22.22/-	Ø22.22/-
	Packing Dimension	Indoor(W*H*D)	inch(mm)	50.8*27.4*11.4(1290*696*290)	50.8*27.4*11.4(1290*696*290)	66.4*31.8*12.4(1686*807*315)	66.4*31.8*12.4(1686*807*315)
		Outdoor(W*H*D)	inch(mm)	40.1*28.1*17.3(1020*715*440)	40.1*34.2*17.3(1020*870*440)	42.9*41.5*17.3(1090*1055*440)	42.9*41.5*17.3(1090*1055*440)
	Stuffing Quantity	With(Without) S/Parts	20/40ft	46/96	42/88	28/59	28/59

Notes: 1. Capacities are based on the following conditions:

Cooling:
- Indoor Temperature 27°C(80.6°F) DB /19°C(66.2°F) WB
- Outdoor Temperature 35°C(95°F) DB /24°C(75.2°F) WB
- Interconnecting Piping Length 7.5m
- Level Difference of Zero.

Heating:
- Indoor Temperature 20°C(68°F) DB / 15°C(59°F) WB
- Outdoor Temperature 7°C(44.6°F) DB / 6°C(42.8°F) WB
- Interconnecting Piping Length 7.5 m
- Level Difference of Zero.

2. Capacities are Net Capacities.
3. Due to our policy of innovation some specifications may be changed without notification.

5. Specifications

Item			Unit	LV-D4881CL	LV-D4881HL	LV-D6081CL	LV-D6081HL
General	Cooling Capacity		kcal/h(W)	12096(14067)	12096(14067)	15120(17584)	15120(17584)
			Btu/h	48,000	48,000	60,000	60,000
	Heating Capacity		kcal/h(W)	-	12096(14067)	-	15120(17584)
			Btu/h	-	48,000	-	60,000
	Input	Cooling/Heating	W	4350/-	4,600/3,600	5,245/-	4,900/5,000
	Running Current	Cooling/Heating	A	11.16/-	8.2/8.2	15.16/-	8.6/8.6
	Starting Current	Cooling/Heating	A	61.8	61.8	74	74
	Power Supply		ø,V,Hz	3,380~415,50	3,380~415,50	3,380~415,50	3,380~415,50
	Power Factor		%	98	98	98	98
	E.E.R	Cooling	kcal/h W(W/W)	2.78(3.23)	2.63(3.06)	2.88(3.35)	3.09(3.59)
			Btu/h W	10.56	10.43	10.72	12.24
	C.O.P	Heating	kcal/h W(W/W)	-	3.36(3.91)	-	3.02(3.52)
			Btu/h W	-	13.33	-	12.00
	Setting temperature range(cool/heat)			18~30/-	18~30/16~30	18~30/-	18~30/16~30
	Dehumidification Rate		l/h	3.2	3.2	5.25	3.78
	Refrigerant Control			Capillary Tube	Capillary Tube	Capillary Tube	Capillary Tube
	Refrigerant charge		g(oz), type	3690(130.2),R22	5100(180),R22	3800(134),R22	3900(138),R22
Indoor	Indoor fan motor	Output	w	90*2	90*2	107*2	107*2
		Model		F2-1/8 TBT	F2-1/8 TBT	F2-1/7-TA-FG	F2-1/7-TA-FG
		No. of Poles		4	4	4	4
		Input	W	150*2	150*2	195*2	195*2
		Running Current	A	0.7*2	0.7*2	0.98*2	0.98*2
		Capacitor	µF/Vac	3/400	3/400	5/400	5/400
	Indoor Fan	Type		Centrifugal Blower	Centrifugal Blower	Centrifugal Blower	Centrifugal Blower
		No. Used / Diameter	EA/inch(mm)	4/6.4(163)	4/6.4(163)	4/6.4(163)	4/6.4(163)
		Motor Step		3	3	3	3
	Indoor Fan RPM	Cooling(H/M/L)	rpm	1200/1000/800	1200/1000/800	1300/1100/900	1300/1100/900
		Heating(H/M/L)	rpm	-	1200/1000/800	-	1300/1100/900
	Air Circulation	Indoor (H/M/L)	CMM(CFM)	34.3/27.8/21.3 (1211/982/752)	35/30/25 (1236/1059/883)	34.9/28.6/22.1 (1232/1010/780)	42/35/28 (1483/1236/989)
	Noise Level(Sound Press,1m)	Indoor(H/M/L)	dB(A)±3	52/47/42	56/52/46	55/50/45	58/55/47
	Temperature Controller			Thermistor	Thermistor	Thermistor	Thermistor
	Indoor Coil	Tube Size (OD)	inch(mm)	0.375(9.52)	0.375(9.52)	0.375(9.52)	0.375(9.52)
		Fins per inch		14	14	14	14
		No. of Rows & Column		3R 10C	3R 10C	3R 10C	3R 10C
	Dimensions (W*H*D)	Indoor	inch(mm)	75.0*27.48*10.63 (1905*698*270)	75.0*27.48*10.63 (1905*698*270)	75.0*27.48*10.63 (1905*698*270)	75.0*27.48*10.63 (1905*698*270)
	Net Weight	indoor	kg(lbs)	74(163)	74(163)	81(178)	81(178)
Outdoor	Compressor	Locked Rotor Amp.	A	61.8	61.8	74	74
		Type		Scroll	Scroll	Scroll	Scroll
		Quantity	No	1	1	1	1
		Model		ZR57KC TFD	ZR57KC TFD	ZR68KC TFD	ZR68KC TFD
		Maker		Copeland	Copeland	Copeland	Copeland
		Capacity	Btu/h	46,426	46,426	55,953	55,949
		Motor Type		-	-	-	-
		Motor Input	W	4,160	4,160	4,970	4,970
		Oil Type		WHITE OIL SONTEX 200 LT	WHITE OIL SONTEX 200 LT	WHITE OIL SONTEX 200 LT	WHITE OIL SONTEX 200 LT
		Oil Charge	cc	1,650	1,650	1,770	1,770
		O.L.P Type(model name)		Internal	Internal	Internal	Internal
	Outdoor Coil	Tube Size (OD)	inch(mm)	0.375(9.52)	0.375(9.52)	0.375(9.52)	0.375(9.52)
		Fins per inch		16	16	16	16
		No. of Rows & Column		3R 36C	3R 36C	2R 46C	2R 46C
	Outdoor fan motor	Output	W	149	149	149*2	149*2
		Model		CB1-1/5TT-FG	CB1-1/5TT-FG	CB1-1/5TT-FG	CB1-1/5TT-FG
		No. of Poles		6	6	6	6
		Input	W	295	295	295*2	295*2
		Running Current	A	1.56	1.56	1.56*2	1.56*2
		Capacitor	µF/Vac	7.5/400	7.5/400	7.5/400	7.5/400
	Outdoor Fan	Type		Propeller	Propeller	Propeller	Propeller
		No. Used / Diameter	EA/mm	1/ø508	1/ø508	2/ø508	2/ø508
		Discharge	Side/Top	Side Discharge	Side Discharge	Side Discharge	Side Discharge
		Speed	rpm	900	900	900	900
	Air Circulation	Outdoor	CMM(CFM)	62(2200)	62(2200)	119(4200)	119(4200)
	Noise Level(Sound Press,1m)	Outdoor	dB(A)±3	63	63	64	63
	SVC Valve	Liquid	inch(mm)	1/2(12.7)	1/2(12.7)	1/2(12.7)	1/2(12.7)
		Gas	inch(mm)	3/4(19.05)	3/4(19.05)	3/4(19.05)	3/4(19.05)
	Dimensions (W*H*D)	Outdoor	inch(mm)	37.4*37.4*14.6(950*950*370)	37.4*37.4*14.6(950*950*370)	37.4*48.3*14.6(950*1227*370)	37.4*48.3*14.6(950*1227*370)
	Net Weight	Outdoor	kg(lbs)	85(187)	85(187)	118(260)	118(260)
Other	Power Supply Cable		No.* mm²	5*4.0	5*4.0	5*4.0	5*4.0
	Connecting Cable		No.* mm²	6*1.0	6*1.0	6*1.0	6*1.0
	Connecting Tube(Ø. Socket Flare)	Liquid Side	inch(mm)	1/2(12.7)	1/2(12.7)	1/2(12.7)	1/2(12.7)
		Gas Side	inch(mm)	3/4(19.05)	3/4(19.05)	3/4(19.05)	3/4(19.05)
		Length, std	m	5	5	5	5
		Max length/elevation	m	25/15	25/15	30/20	30/20
	Drain hose(Inner ø)	Indoor Unit/Outdoor Unit	mm	Ø22.2/-	Ø22.2/-	Ø22.2/-	Ø22.2/-
	Packing Dimension	Indoor(W*H*D)	inch(mm)	78.2*31.8*13.9(1986*807*353)	78.2*31.8*13.9(1986*807*353)	78.2*31.8*13.9(1986*807*353)	78.2*31.8*13.9(1986*807*353)
		Outdoor(W*H*D)	inch(mm)	42.9*41.5*17.3(1090*1055*440)	42.9*41.5*17.3(1090*1055*440)	39.1*50.9*17.0(993*1292*432)	39.1*50.9*17.0(993*1292*432)
	Stuffing Quantity	With(Without) S/Parts	20/40ft	22/48	22/48	20/45	20/45

Notes: 1. Capacities are based on the following conditions:

Cooling: - Indoor Temperature 27°C(80.6°F) DB /19°C(66.2°F) WB
- Outdoor Temperature 35°C(95°F) DB /24°C(75.2°F) WB
- Interconnecting Piping Length 7.5m
- Level Difference of Zero.

Heating: - Indoor Temperature 20°C(68°F) DB / 15°C(59°F) WB
- Outdoor Temperature 7°C(44.6°F) DB / 6°C(42.8°F) WB
- Interconnecting Piping Length 7.5 m
- Level Difference of Zero.

2. Capacities are Net Capacities.
3. Due to our policy of innovation some specifications may be changed without notification.

5. Specifications

Item			Unit	LV-H368KLA(B)0		LV-H488LLA(B)0	LV-H608LLA(B)0
General	Cooling Capacity		kcal/h(W)	9,072(10,551)		11,844(13,774)	13,104(15,240)
			Btu/h	36,000		47,000	52,000
	Heating Capacity		kcal/h(W)	9,324(10,844)		13,028(15,152)	14,364(16,705)
			Btu/h	37,000		51,700	57,000
	Input	Cooling/Heating	W	3,470/3,350		4,790/4,370	5,670/5,180
	Running Current	Cooling/Heating	A	6.3/6.1		8.0/7.3	10.0/9.5
	Starting Current	Cooling/Heating	A	-		-	-
	Power Supply		ø,V,Hz	3, 380~415, 50		3, 380~415, 50	3, 380~415, 50
	Power Factor		%	-		-	-
	E.E.R	Cooling	kcal/h W(W/W)	2.61(3.04)		2.47(2.88)	2.31(2.69)
			Btu/h W	10.37		9.81	9.17
	C.O.P	Heating	kcal/h W(W/W)	2.78(3.24)		2.98(3.47)	2.77(3.22)
			Btu/h W	11.0		11.83	11.0
	Setting temperature range(cool/heat)		°C	18~30/16~30		18~30/16~30	18~30/16~30
	Dehumidification Rate		l/h	3.5		5.8	6.2
	Refrigerant Control			capi.		capi.	capi.
	Refrigerant charge		g(oz), type	2,640(79.3), R22		3,300(116.4), R22	3,300(116.4), R22
Indoor	Indoor fan motor	Output	w	63	30	63	63
		Model		YDK-090S43513-01 * 1EA	IC-9430LG58E * 1EA	YDK-090S43513-01 * 2EA	YDK-090S43513-01 * 2EA
		No. of Poles		4	4	4	4
		Input	W	140	60	152	152
		Running Current	A	0.7	0.28	0.67	0.67
		Capacitor	µF/Vac	4.0/440	4.0/ 440	4.0/440	4.0/440
	Indoor Fan	Type		Blower		Blower	Blower
		No. Used / Diameter	EA/inch(mm)	4/140(5.5)		4/140(5.5)	4/140(5.5)
	Indoor Fan RPM	Cooling(H/M/L)	rpm	1,377/1,280/1,170	1,420/1,340/1,240	1,380/1,310/1,240	1,380/1,310/1,240
		Heating(H/M/L)	rpm	1,377/1,280/1,170	1,420/1,340/1,240	1,380/1,310/1,240	1,380/1,310/1,240
	Air Circulation	Indoor (H/M/L)	CMM(CFM)	29/27/24(1,024/953/847)		33/31/29(1,165/1,094/1,024)	34/33/31(1,200/1,165/1,094)
	Noise Level(Sound Press,1m)	Indoor(H/M/L)	dB(A)±3	43/41/39		54/52/50	56/54/52
	Temperature Controller			Thermistor		Thermistor	Thermistor
	Indoor Coil	Tube Size (OD)	inch(mm)	0.275(7)		0.275(7)	0.275(7)
		Fins per inch		17		19	19
		No. of Rows & Column		3R 14C		3R 14C	3R 14C
	Dimensions (W*H*D)	Indoor	inch(mm)	53.2*8.66*25.5(1,350*220*650)		68.9*8.66*25.5(1,750*220*650)	68.9*8.66*25.5(1,750*220*650)
	Net Weight	indoor	kg(lbs)	35(77.2)		45(99.2)	45(99.2)
Outdoor	Compressor	Locked Rotor Amp.	A	22		47	70
		Type		Rotary		Scroll	scroll
		Quantity	No	2		1	1
		Model		QP325YAA		SR061YAC	SR073YAB
		Maker		LG		LG	LG
		Capacity	kcal/hr(Btu/h)	4,838 (19,200)		12,474(49,500)	14,742(58,500)
		Motor Type		Three phase induction		Three phase induction	Three phase induction
		Motor Input	W	1,778		4,500	5,320
		Oil Type		NM56/SUNISO 4GSI		SUNISO 4GSI	SUNISO 4GSI
		Oil Charge	cc	700		1800	1800
		O.L.P Type(model name)		Internal		Internal	Internal
	Outdoor Coil	Tube Size (OD)	inch(mm)	0.275(7.0)		0.275(7.0)	0.275(7)
		Fins per inch		18		17	17
		No. of Rows & Column		2R 48C		2R 52C	2R 52C
	Outdoor fan motor	Output	W	47.2		72	72
		Model		OBM-3018P2		OBM-4006P2	OBM-4006P2
		No. of Poles		4		6	6
		Input	W	107.5		151	151
		Running Current	A	0.48		0.63	0.63
		Capacitor	µF/Vac	2/400		6/370	6 / 370
	Outdoor Fan	Type		Propeller		Propeller	Propeller
		No. Used / Diameter	EA/inch(mm)	2/15.7(400)		2/18.1(460)	2/18.1(460)
		Discharge	Side/Top	Side Discharge		Side Discharge	Side Discharge
		Speed	rpm	1,040		880	880
	Air Circulation	Outdoor	CMM(CFM)	64(2,260)		105(3,708)	105(3,708)
	Noise Level(Sound Press,1m)	Outdoor	dB(A)±3	58		60	62
	SVC Valve	Liquid	inch(mm)	1/4(6.35)		3/8(9.52)	3/8(9.52)
		Gas	inch(mm)	5/8(15.88)		3/4(19.05)	3/4(19.05)
	Dimensions (W*H*D)	Outdoor	inch(mm)	34.2*41.7*12.5(870*1,060*320)		35.4*45.6*14.6(900*1,160*370)	35.4*45.6*14.6(900*1,160*370)
	Net Weight	Outdoor	kg(lbs)	80(176)		95(209.4)	95(209.4)
Other	Power Supply Cable(With Earth Cable)		No.* mm²	5*3.5		5*3.5	5*3.5
	Conncecting Cable(With Earth Cable)		No.* mm²	5*1.25		5*1.25	5*1.25
	Connecting Tube(Ø. Socket Flare)	Liquid Side	inch(mm)	1/4(6.35)		3/8(9.52)	3/8(9.52)
		Gas Side	inch(mm)	5/8(15.88)		3/4(19.05)	3/4(19.05)
		Length, std	m	5		5	5
		Max length/elevation	m	30/20		50/30	30/20
	Drain hose(Inner ø)	Indoor Unit	mm	Ø17		Ø17	Ø17
	Packing Dimension	Indoor(W*H*D)	inch(mm)	1,450*315*750		1,850*315*750	1,850*315*750
		Outdoor(W*H*D)	inch(mm)	1,060*1,140*440		1,060*1,220*455	1,060*1,220*455
	Additional Refrigerant Charge(Over 5m)		g	50		60	60

Notes: 1. Capacities are based on the following conditions:

Cooling: - Indoor Temperature 27˚C(80.6˚F) DB /19˚C(66.2˚F) WB
- Outdoor Temperature 35˚C(95˚F) DB /24˚C(75.2˚F) WB
- Interconnecting Piping Length 5m
- Level Difference of Zero.

Heating: - Indoor Temperature 20˚C(68˚F) DB / 15˚C(59˚F) WB
- Outdoor Temperature 7˚C(44.6˚F) DB / 6˚C(42.8˚F) WB
- Interconnecting Piping Length 5 m
- Level Difference of Zero.

2. Capacities are Net Capacities.
3. Due to our policy of innovation some specifications may be changed without notification.

5. Specifications

	Item		Unit	LV-C368KLA(B)0		LV-C488LLA(B)0	LV-C608LLA(B)0
General	Cooling Capacity		kcal/h(W)	9,072(10,551)		11,844(13,774)	13,104(15,240)
			Btu/h	36,000		47,000	52,000
	Heating Capacity		kcal/h(W)	-		-	-
			Btu/h	-		-	-
	Input	Cooling/Heating	W	3,470/-		4,790/-	5,670/-
	Running Current	Cooling/Heating	A	6.3/-		8/-	10/-
	Starting Current	Cooling/Heating	A	-		-	-
	Power Supply		ø,V,Hz	3, 380~415, 50		3, 380~415, 50	3, 380~415, 50
	Power Factor		%	-		-	-
	E.E.R	Cooling	kcal/h W(W/W)	2.61(3.04)		2.47(2.88)	2.31(2.69)
			Btu/h W	10.37		9.81	9.17
	C.O.P	Heating	kcal/h W(W/W)	-		-	-
			Btu/h W	-		-	-
	Setting temperature range(cool/heat)		°C	18~30		18~30	18~30
	Dehumidification Rate		l/h	3.5		5.8	6.2
	Refrigerant Control			capi.		capi.	capi.
	Refrigerant charge		g(oz), type	2,640(79.3), R22		3,300(116.4), R22	3,300(116.4), R22
Indoor	Indoor fan motor	Output	w	63	30	63	63
		Model		YDK-090S43513-01 * 1EA	IC-9430LG58E * 1EA	YDK-090S43513-01 * 2EA	YDK-090S43513-01 * 2EA
		No. of Poles		4	4	4	4
		Input	W	140	60	152	152
		Running Current	A	0.7	0.28	0.67	0.67
		Capacitor	µF/Vac	4.0/440	4.0/ 440	4.0/440	4.0/440
	Indoor Fan	Type		Blower		Blower	Blower
		No. Used / Diameter	EA/inch(mm)	4/140(5.5)		4/140(5.5)	4/140(5.5)
	Indoor Fan RPM	Cooling(H/M/L)	rpm	1,377/1,280/1,170	1,420/1,340/1,240	1,380/1,310/1,240	1,380/1,310/1,240
		Heating(H/M/L)	rpm	-		-	-
	Air Circulation	Indoor (H/M/L)	CMM(CFM)	29/27/24(1,024/953/847)		33/31/29 (1,165/1,094/1,024)	34/33/31(1,200/1,165/1,094)
	Noise Level(Sound Press,1m)	Indoor(H/M/L)	dB(A)±3	43/41/39		54/52/50	56/54/52
	Temperature Controller			Thermistor		Thermistor	Thermistor
	Indoor Coil	Tube Size (OD)	inch(mm)	0.275(7)		0.275(7)	0.275(7)
		Fins per inch		17		19	19
		No. of Rows & Column		3R 14C		3R 14C	3R 14C
	Dimensions (W*H*D)	Indoor	inch(mm)	53.2*8.66*25.5(1,350*220*650)		68.9*8.66*25.5(1,750*220*650)	68.9*8.66*25.5(1,750*220*650)
	Net Weight	indoor	kg(lbs)	35(77.2)		45(99.2)	45(99.2)
Outdoor	Compressor	Locked Rotor Amp.	A	22		47	70
		Type		Rotary		Scroll	scroll
		Quantity	No	2		1	1
		Model		QP325YAA		SR061YAC	SR073YAB
		Maker		LG		LG	LG
		Capacity	kcal/hr(Btu/h)	4,838(19,200)		12474(49,500)	14,742(58,500)
		Motor Type		Three phase induction		Three phase induction	Three phase induction
		Motor Input	W	1778		4500	5320
		Oil Type		NM56/SUNISO 4GSI		SUNISO 4GSI	SUNISO 4GSI
		Oil Charge	cc	700		1800	1800
		O.L.P Type(model name)		Internal		Internal	Internal
	Outdoor Coil	Tube Size (OD)	inch(mm)	0.275(7.0)		0.275(7.0)	0.374(9.52)
		Fins per inch		18		17	17
		No. of Rows & Column		2R 48C		2R 52C	2R 52C
	Outdoor fan motor	Output	W	47.2		72	72
		Model		OBM-3018P2		OBM-4501P2	OBM-4501P2
		No. of Poles		4		6	6
		Input	W	107.5		151	151
		Running Current	A	0.48		0.63	0.63
		Capacitor	µF/Vac	2/400		6/370	6/370
	Outdoor Fan	Type		Propeller		Propeller	Propeller
		No. Used / Diameter	EA/inch(mm)	2/15.7(400)		2/18.1(460)	2/18.1(460)
		Discharge	Side/Top	Side Discharge		Side Discharge	Side Discharge
		Speed	rpm	1,040		880	880
	Air Circulation	Outdoor	CMM(CFM)	64(2,260)		105(3,708)	105(3,708)
	Noise Level(Sound Press,1m)	Outdoor	dB(A)±3	58		60	62
	SVC Valve	Liquid	inch(mm)	1/4(6.35)		3/8(9.52)	3/8(9.52)
		Gas	inch(mm)	5/8(15.88)		3/4(19.05)	3/4(19.05)
	Dimensions (W*H*D)	Outdoor	inch(mm)	34.2*41.7*12.5(870*1,060*320)		35.4*45.6*14.6(900*1,160*370)	35.4*45.6*14.6(900*1,160*370)
	Net Weight	Outdoor	kg(lbs)	80(176)		95(209.4)	95(209.4)
Other	Power Supply Cable(With Earth Cable)		No.* mm²	5*3.5		5*3.5	5*3.5
	Conncecting Cable(With Earth Cable)		No.* mm²	4*1.25		4*1.25	4*1.25
	Connecting Tube(Ø. Socket Flare)	Liquid Side	inch(mm)	1/4(6.35)		3/8(9.52)	3/8(9.52)
		Gas Side	inch(mm)	5/8(15.88)		3/4(19.05)	3/4(19.05)
		Length, std	m	5		5	5
		Max length/elevation	m	30/20		50/30	30/20
	Drain hose(Inner ø)	Indoor Unit	mm	Ø17		Ø17	Ø17
	Packing Dimension	Indoor(W*H*D)	inch(mm)	1,452*315*750		1,850*315*750	1,850*315*750
		Outdoor(W*H*D)	inch(mm)	1,060*1,140*440		1,060*1,220*455	1,060*1,220*455
	Additional Refrigerant Charge(Over 5m)		g	50		60	60

Notes: 1. Capacities are based on the following conditions:

Cooling: - Indoor Temperature 27˚C(80.6˚F) DB /19˚C(66.2˚F) WB
- Outdoor Temperature 35˚C(95˚F) DB /24˚C(75.2˚F) WB
- Interconnecting Piping Length 5m
- Level Difference of Zero.

Heating: - Indoor Temperature 20˚C(68˚F) DB / 15˚C(59˚F) WB
- Outdoor Temperature 7˚C(44.6˚F) DB / 6˚C(42.8˚F) WB
- Interconnecting Piping Length 5 m
- Level Difference of Zero.

2. Capacities are Net Capacities.
3. Due to our policy of innovation some specifications may be changed without notification.

5. Specifications

Item			Unit	LV-C368KLA1		LV-C488LLA1	LV-C608LLA1
General	Cooling Capacity		kcal/h(W)	8,568(9,964)		11,844(13,774)	13,104(15,240)
			Btu/h	34,000		47,000	52,000
	Heating Capacity		kcal/h(W)	-		-	-
			Btu/h	-		-	-
	Input	Cooling/Heating	W	3,200/-		4,790/-	5,670/-
	Running Current	Cooling/Heating	A	5.6/-		8.0/-	10.0/-
	Starting Current	Cooling/Heating	A	-		-	-
	Power Supply		ø,V,Hz	3, 380~415, 50		3, 380~415, 50	3, 380~415, 50
	Power Factor		%	-		-	-
	E.E.R	Cooling	kcal/h W(W/W)	2.68(3.11)		2.47(2.88)	2.31(2.69)
			Btu/h W	10.63		9.81	9.17
	C.O.P	Heating	kcal/h W(W/W)	-		-	-
			Btu/h W	-		-	-
	Setting temperature range(cool/heat)		°C	18~30/-		18~30/-	18~30/-
	Dehumidification Rate		l/h	3.5		5.8	6.2
	Refrigerant Control			capi.		capi.	capi.
	Refrigerant charge		g(oz), type	2,350(82.9), R22		3,300(116.4), R22	3,300(116.4), R22
Indoor	Indoor fan motor	Output	w	63	30	63	63
		Model		YDK-090S43513-01 * 1 EA	IC-9430LG58E * 1 EA	YDK-090S43513-01 * 2 EA	YDK-090S43513-01 * 2 EA
		No. of Poles		4	4	4	4
		Input	W	140	60	152	152
		Running Current	A	0.7	0.28	0.67	0.67
		Capacitor	µF/Vac	4.0/440	4.0/ 440	4.0/440	4.0/440
	Indoor Fan	Type		Blower		Blower	Blower
		No. Used / Diameter	EA/inch(mm)	4/140(5.5)		4/140(5.5)	4/140(5.5)
	Indoor Fan RPM	Cooling(H/M/L)	rpm	1,377/1,280/1,170	1,420/1,340/1,240	1,380/1,310/1,240	1,380/1,310/1,240
		Heating(H/M/L)	rpm	-		-	-
	Air Circulation	Indoor (H/M/L)	CMM(CFM)	29/27/24(1,024/953/847)		33/31/29 (1,165/1,094/1,024)	34/33/31(1,200/1,165/1,094)
	Noise Level(Sound Press,1m)	Indoor(H/M/L)	dB(A)±3	43/41/39		54/52/50	56/54/52
	Temperature Controller			Thermistor		Thermistor	Thermistor
	Indoor Coil	Tube Size (OD)	inch(mm)	0.275(7)		0.275(7)	0.275(7)
		Fins per inch		17		19	19
		No. of Rows & Column		3R 14C		3R 14C	3R 14C
	Dimensions (W*H*D)	Indoor	inch(mm)	53.2*8.66*25.5(1,350*220*650)		68.9*8.66*25.5(1,750*220*650)	68.9*8.66*25.5(1,750*220*650)
	Net Weight	indoor	kg(lbs)	35(77.2)		45(99.2)	45(99.2)
Outdoor	Compressor	Locked Rotor Amp.	A	36		47	70
		Type		Scroll		Scroll	scroll
		Quantity	No	1		1	1
		Model		SQ042YAA		SR061YAC	SR073YAB
		Maker		LG		LG	LG
		Capacity	kcal/hr(Btu/h)	8,686 (34,500)		12474(49,500)	14,742(58,500)
		Motor Type		Three phase induction		Three phase induction	Three phase induction
		Motor Input	W	1,778		4,500	5,320
		Oil Type		SUNISO 4GSI		SUNISO 4GSI	SUNISO 4GSI
		Oil Charge	cc	1,300±10		1,800	1,800
		O.L.P Type(model name)		Internal		Internal	Internal
	Outdoor Coil	Tube Size (OD)	inch(mm)	0.275(7.0)		0.275(7.0)	0.374(9.52)
		Fins per inch		18		17	17
		No. of Rows & Column		2R 48C		2R 52C	2R 52C
	Outdoor fan motor	Output	W	47.2		72	72
		Model		OBM-3018P2		OBM-4502P2	OBM-4502P2
		No. of Poles		4		6	6
		Input	W	107.5		130	130
		Running Current	A	0.48		0.58	0.58
		Capacitor	µF/Vac	2/400		6/370	6/370
	Outdoor Fan	Type		Propeller		Propeller	Propeller
		No. Used / Diameter	EA/inch(mm)	2/15.7(400)		2/18.1(460)	2/18.1(460)
		Discharge	Side/Top	Side Discharge		Side Discharge	Side Discharge
		Speed	rpm	1,040		820	820
	Air Circulation	Outdoor	CMM(CFM)	64(2,260)		102(3,602)	102(3,602)
	Noise Level(Sound Press,1m)	Outdoor	dB(A)±3	58		60	62
	SVC Valve	Liquid	inch(mm)	1/4(6.35)		3/8(9.52)	3/8(9.52)
		Gas	inch(mm)	5/8(15.88)		3/4(19.05)	3/4(19.05)
	Dimensions (W*H*D)	Outdoor	inch(mm)	34.2*41.7*12.5(870*1,060*320)		35.4*45.6*14.6(900*1,160*370)	35.4*45.6*14.6(900*1,160*370)
	Net Weight	Outdoor	kg(lbs)	80(176.4)		95(209.4)	95(209.4)
Other	Power Supply Cable(With Earth Cable)		No.* mm²	5*3.5		5*3.5	5*3.5
	Conncecting Cable(With Earth Cable)		No.* mm²	4*1.25		4*1.25	4*1.25
	Connecting Tube(Ø. Socket Flare)	Liquid Side	inch(mm)	1/4(6.35)		3/8(9.52)	3/8(9.52)
		Gas Side	inch(mm)	5/8(15.88)		3/4(19.05)	3/4(19.05)
		Length, std	m	7.5		7.5	7.5
		Max length/elevation	m	30/20		50/30	30/20
	Drain hose(Inner ø)	Indoor Unit	mm	Ø17		Ø17	Ø17
	Packing Dimension	Indoor(W*H*D)	inch(mm)	1,452*315*750		1,850*315*750	1,850*315*750
		Outdoor(W*H*D)	inch(mm)	1,060*1,140*440		1,060*1,220*455	1,060*1,220*455
	Additional Refrigerant Charge(Over 5m)		g	50		50	50

Notes: 1. Capacities are based on the following conditions:

Cooling: - Indoor Temperature 27˚C(80.6˚F) DB /19˚C(66.2˚F) WB
- Outdoor Temperature 35˚C(95˚F) DB /24˚C(75.2˚F) WB
- Interconnecting Piping Length 5m
- Level Difference of Zero.

Heating: - Indoor Temperature 20˚C(68˚F) DB / 15˚C(59˚F) WB
- Outdoor Temperature 7˚C(44.6˚F) DB / 6˚C(42.8˚F) WB
- Interconnecting Piping Length 5 m
- Level Difference of Zero.

2. Capacities are Net Capacities.
3. Due to our policy of innovation some specifications may be changed without notification.

6. Dimensional Drawings

Model No.: LV-B1864C(H/B)L, LV-B2464C(H/B)L, LV-B2860C(H)L

Indoor Unit

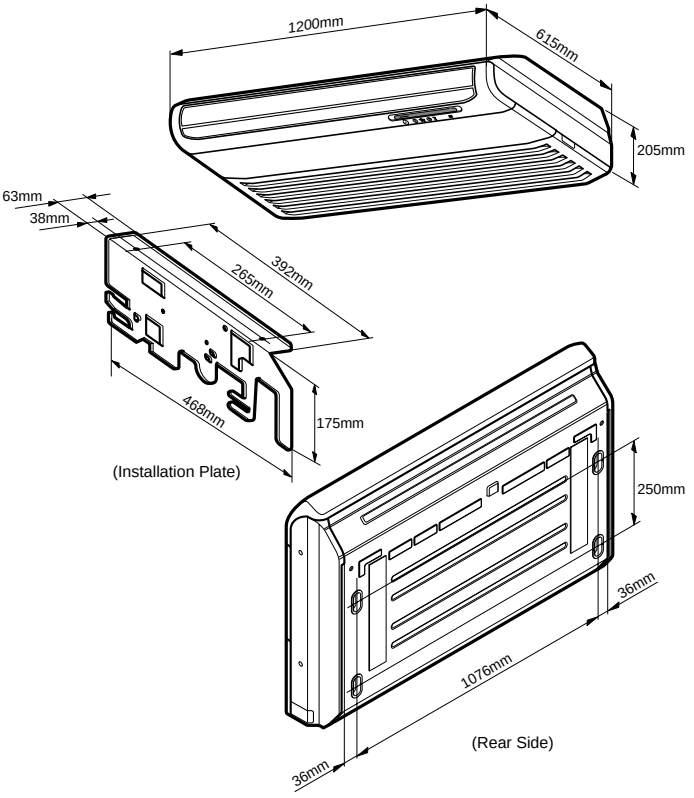

Outdoor Unit

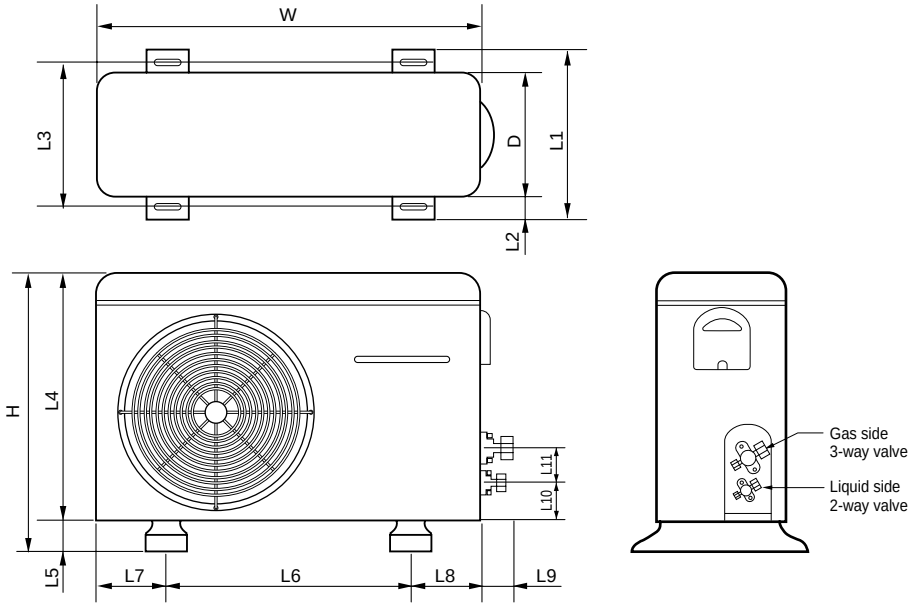

MODEL / Dim.(mm)	LV-B1864C(H/B)L LV-B2464C(H/B)L LV-B2860C(H/B)L	LV-B2860C(H)L
W	870	870
H	655	800
D	320	320
L1	370	370
L2	25	25
L3	340	340
L4	630	775
L5	25	25
L6	546	546
L7	162	162
L8	162	162
L9	54	54
L10	74.5	74.5
L11	79	79

6. Dimensional Drawings

Model No.: LV-C3681C(H)L, LV-D48(60)81C(H)L

Indoor Unit

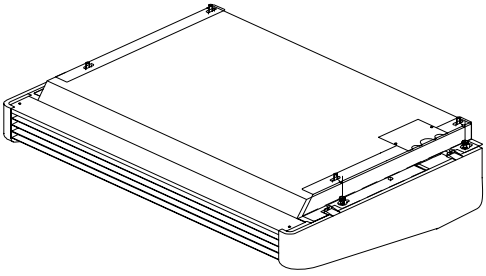

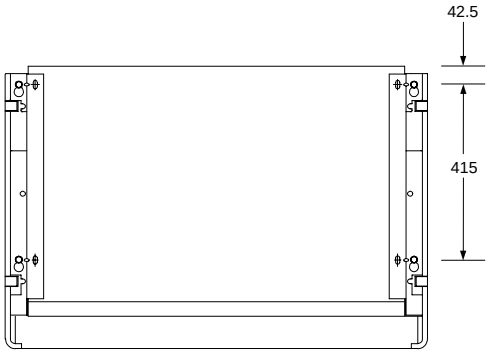

Top View

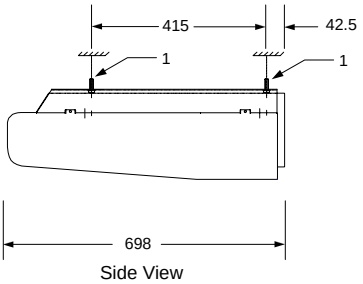

Side View

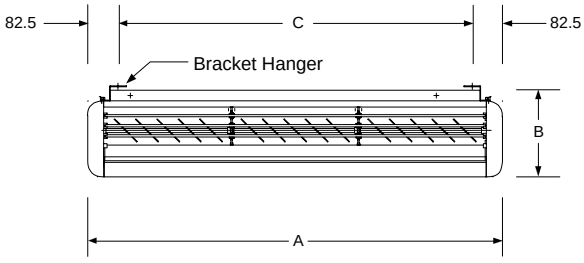

Front View

Dim.(mm) / Model No.	A	B	C
LV-C3681C(H)L	1605	235	1440
LV-D4881C(H)L LV-D6081C(H)L	1905	270	1740

Model No.: LV-C3681C(H)L, LV-D48(60)81C(H)L

Outdoor Unit

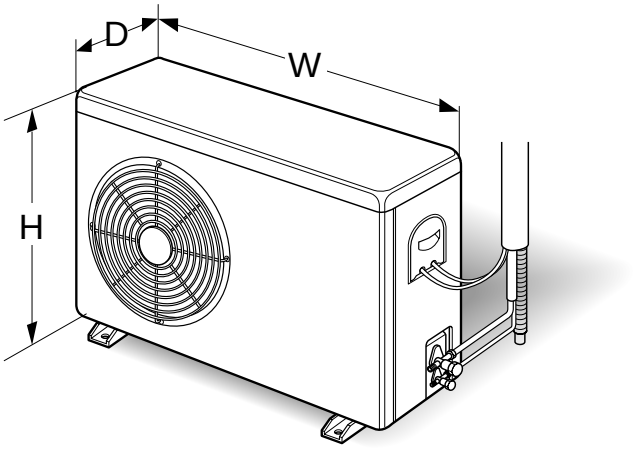

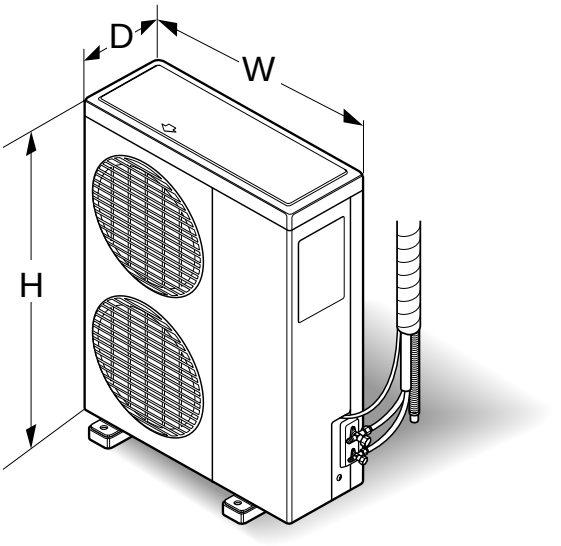

Dim.(mm) / Model	W	H	D
LV-C3681C(H)L LV-D4881C(H)L	950	950	370
LV-D6081C(H)L	950	1227	370

6. Dimensional Drawings

Model No.: LV-C(H)368KLA(B)0, LV-C368KLA1, LV-C(H)48(60)8LLA(B)0, LV-C48(60)8LLA1

Indoor Unit

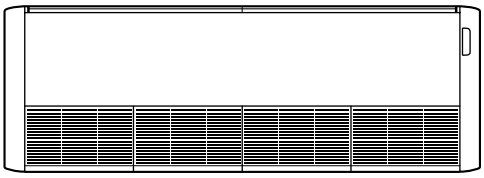

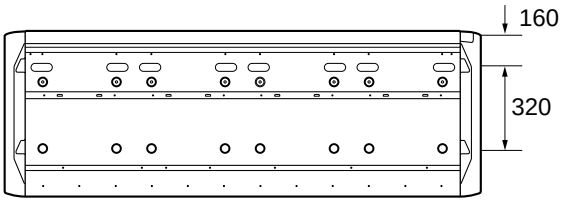

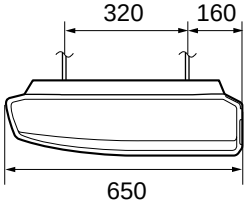

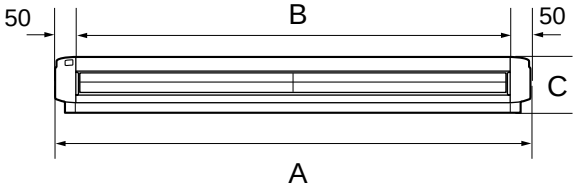

Dim.(mm) / Capacity	A	B	C
LV-C(H)368KLA(B)0 LV-C368KLA1	1350	1255	220
LV-C(H)488LLA(B)0 LV-C488LLA1 LV-C(H)608LLA(B)0 LV-C608LLA1	1750	1655	220

Model No.: LV-C(H)368KLA(B)0, LV-C368KLA1

Outdoor Unit

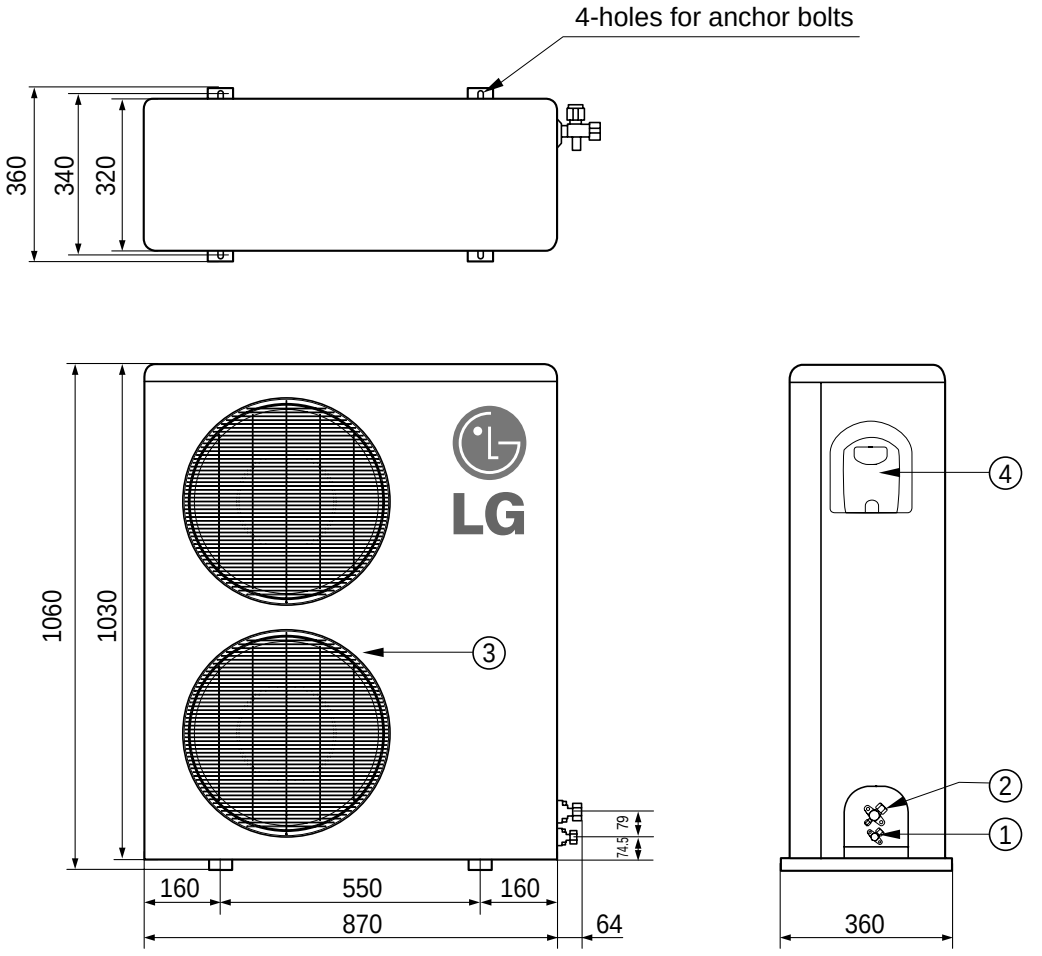

Number	Name	Descripition
1	Liquid side service valve(mm)	Ø6.35
2	Gas side service valve(mm)	Ø15.88
3	Air discharge grill	
4	Control Cover	

6. Dimensional Drawings

Model No.: LV-C(H)48(60)8LLA(B)0, LV-C48(60)8LLA1

Outdoor Unit

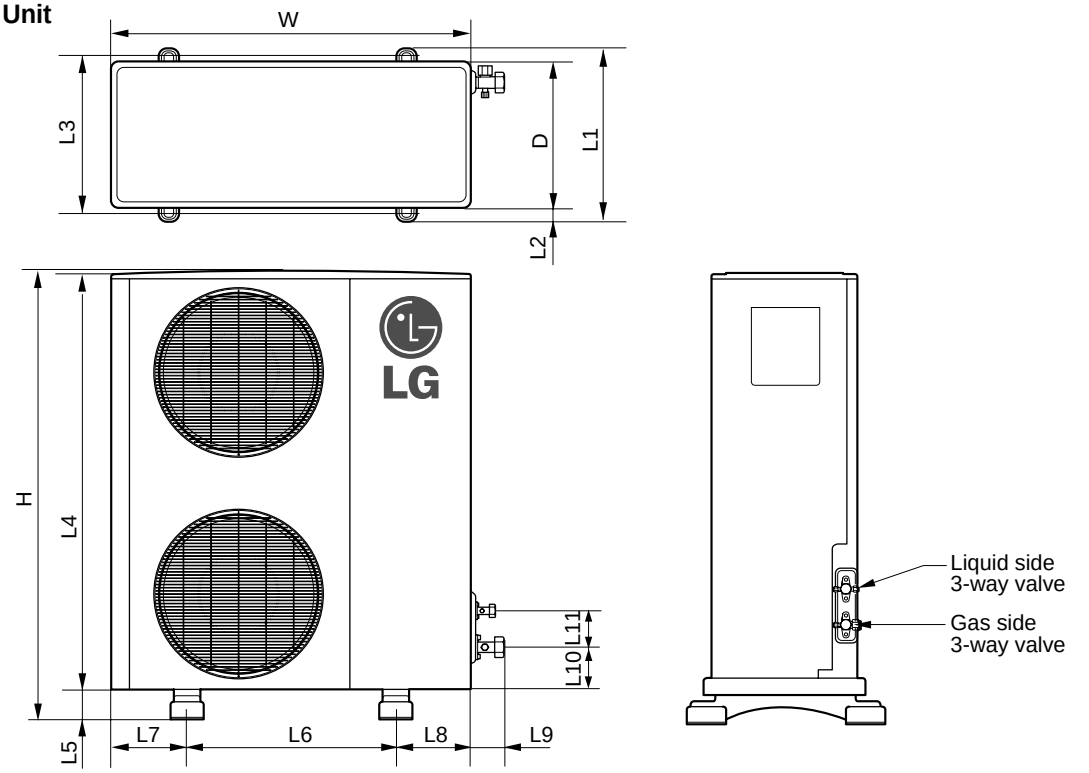

Model No. / Dim.(mm)	LV-C(H)48(60)8LLA(B)0, LV-C48(60)8LLA1
W	900
H	1,160
D	370
L1	420
L2	35
L3	380
L4	1,130
L5	30
L6	550
L7	175
L8	175
L9	70
L10	155
L11	83

Model No.: LV-B1864CL, LV-B2464CL

Indoor Unit

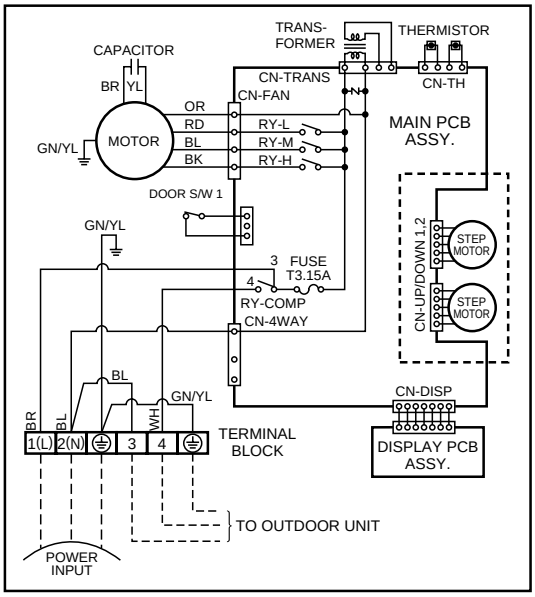

Outdoor Unit

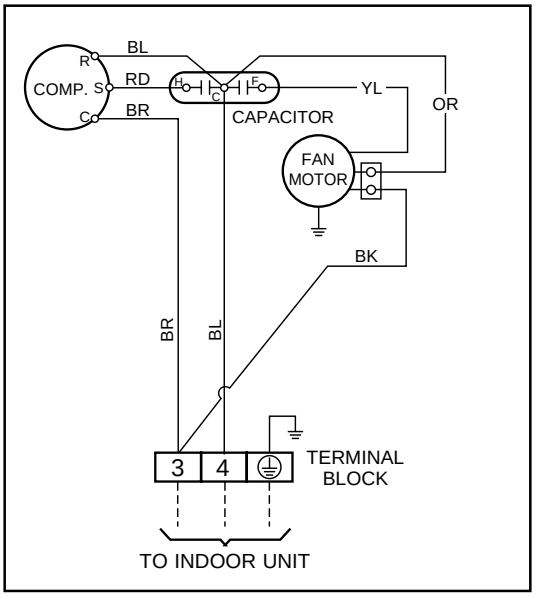

Notes:

RY	RELAY	BL	BLUE	BK	BLACK
BR	BROWN	RD	RED	OR	ORANGE
WH	WHITE	YL	YELLOW	GN/YL	GREEN/YELLOW

Model No.: LV-B1864H(B)L, LV-B2464H(B)L

Indoor Unit

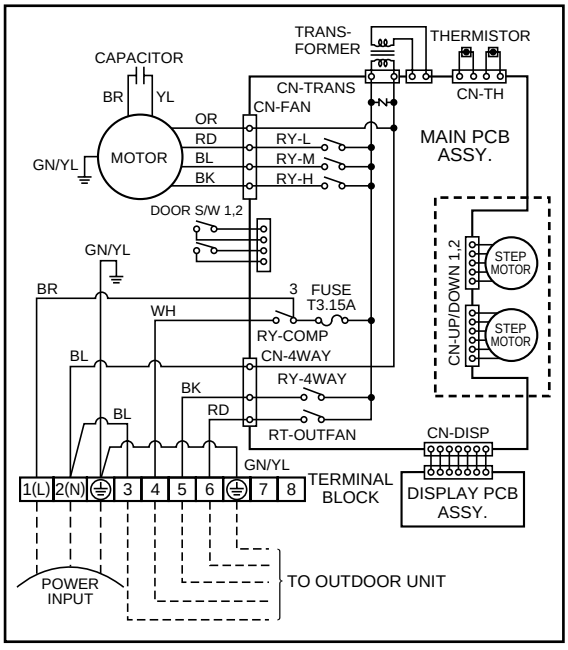

Outdoor Unit

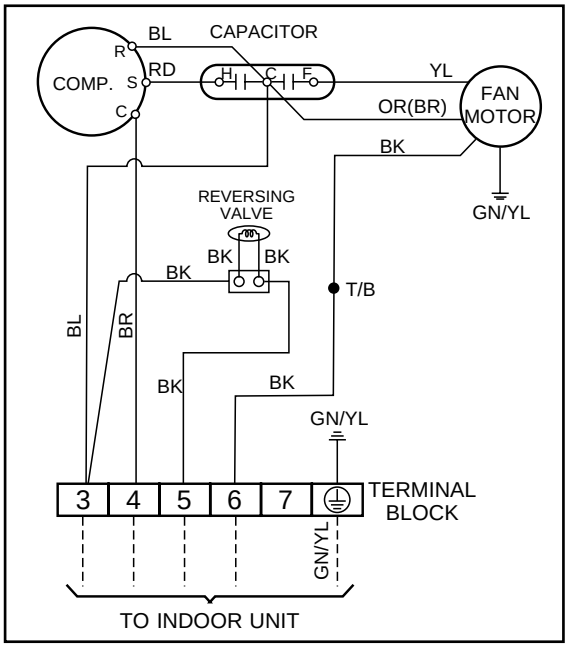

Notes:

RY	RELAY	BL	BLUE	BK	BLACK
BR	BROWN	RD	RED	OR	ORANGE
WH	WHITE	YL	YELLOW	GN/YL	GREEN/YELLOW

7. Wiring Diagrams

Model No.: LV-B2860CL

Indoor Unit

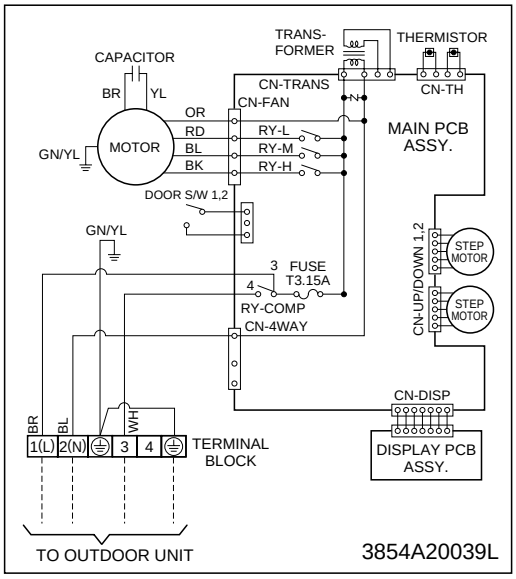

Outdoor Unit

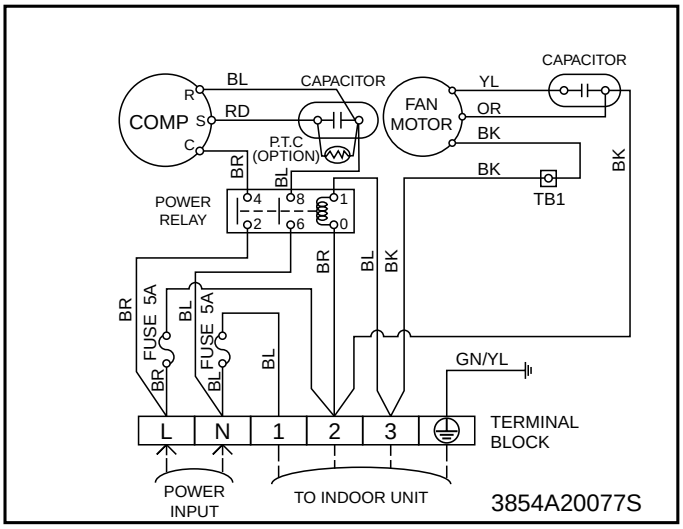

Notes:

RY	RELAY	BL	BLUE	BK	BLACK
BR	BROWN	RD	RED	OR	ORANGE
WH	WHITE	YL	YELLOW	GN/YL	GREEN/YELLOW

Model No.: LV-B2860HL

Indoor Unit

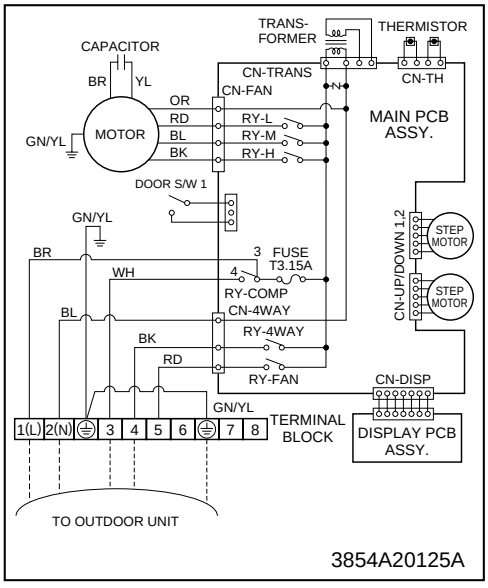

Outdoor Unit

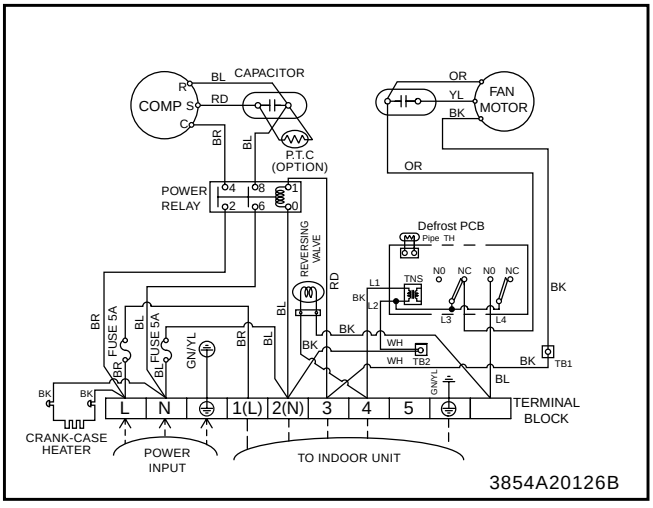

Notes:

RY	RELAY	BL	BLUE	BK	BLACK
BR	BROWN	RD	RED	OR	ORANGE
WH	WHITE	YL	YELLOW	GN/YL	GREEN/YELLOW

7. Wiring Diagrams

Model No.: LV-C3681HL

Indoor Unit **Outdoor Unit**

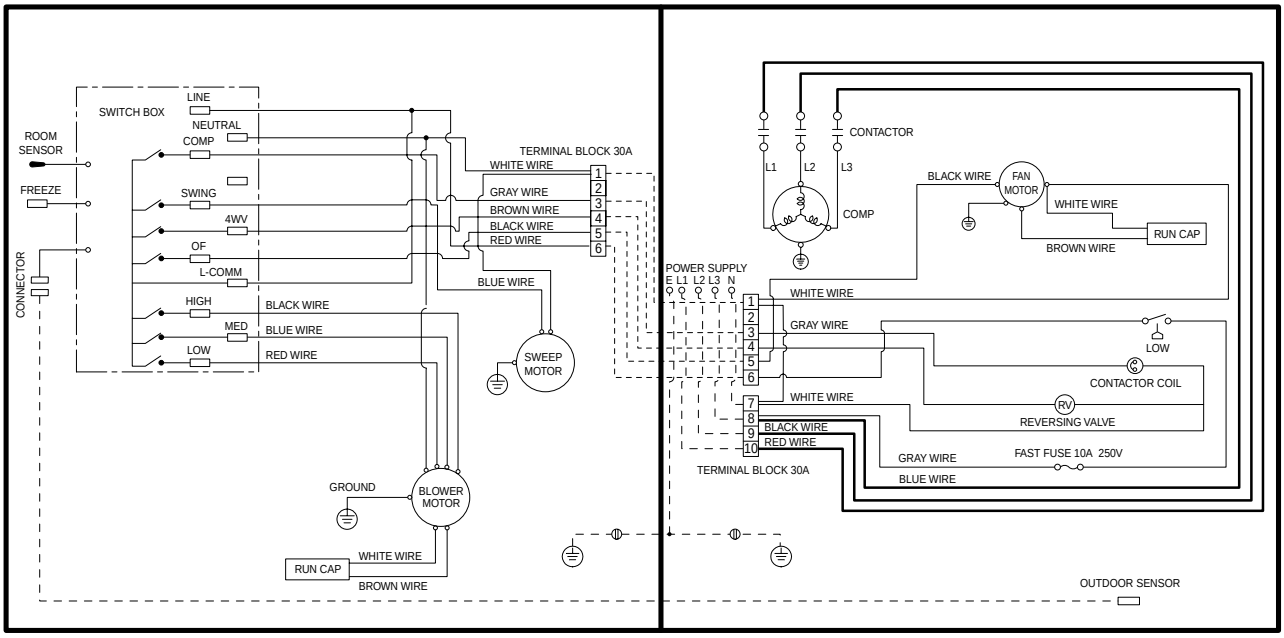

Model No.: LV-C3681CL

Indoor Unit **Outdoor Unit**

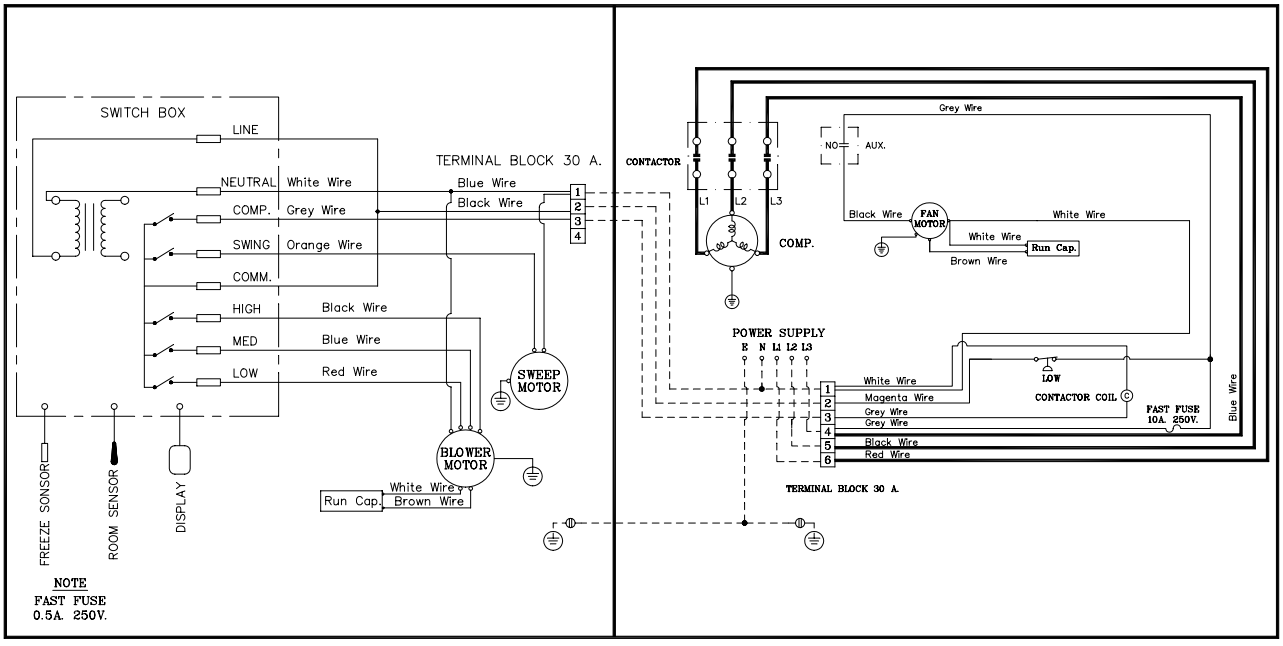

7. Wiring Diagrams

Model No.: LV-D4881HL

Indoor Unit **Outdoor Unit**

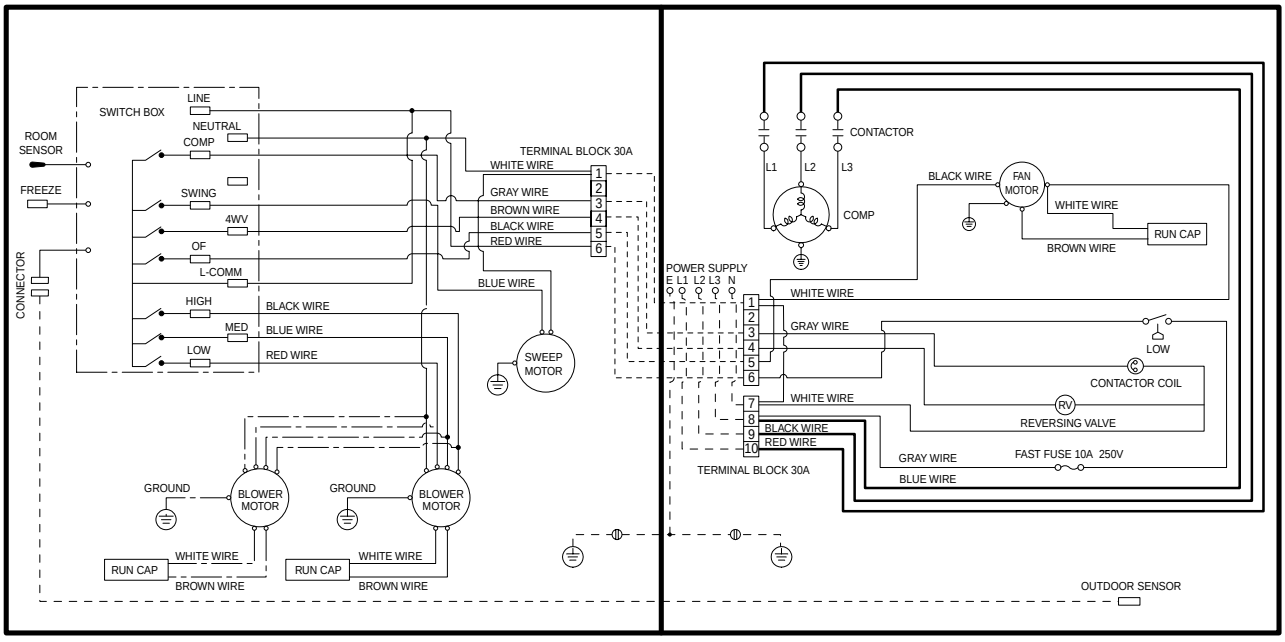

Model No.: LV-D4881CL

Indoor Unit **Outdoor Unit**

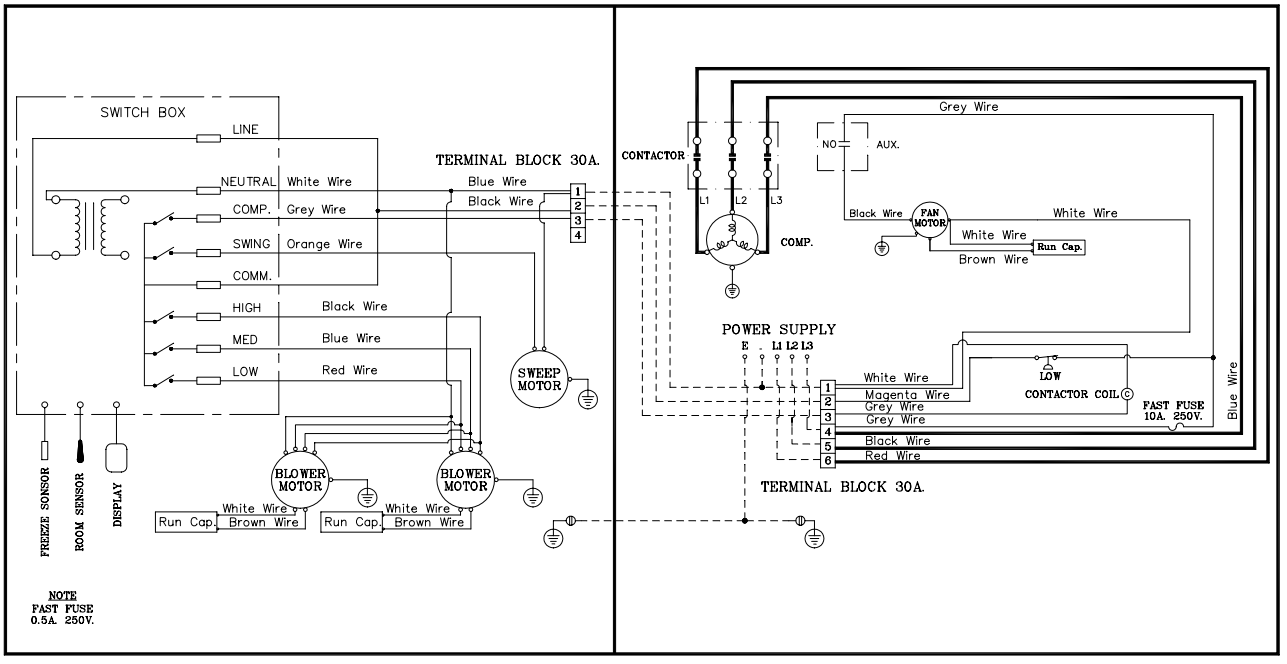

Model No.: LV-D6081HL

Indoor Unit **Outdoor Unit**

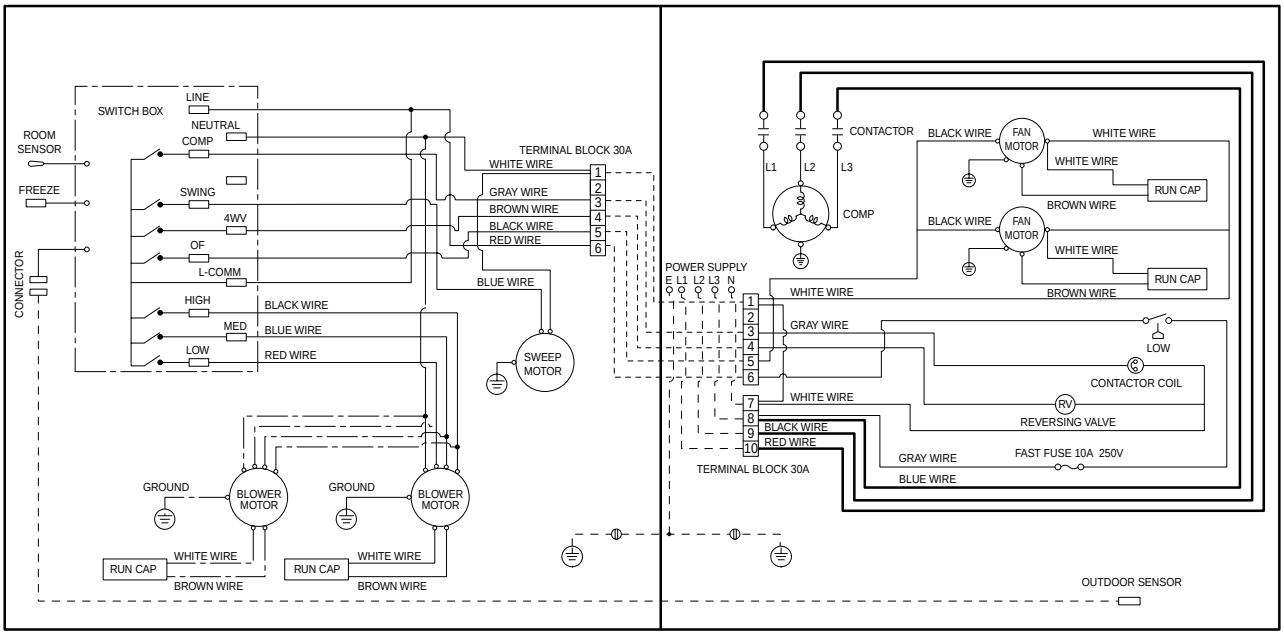

Model No.: LV-D6081CL

Indoor Unit **Outdoor Unit**

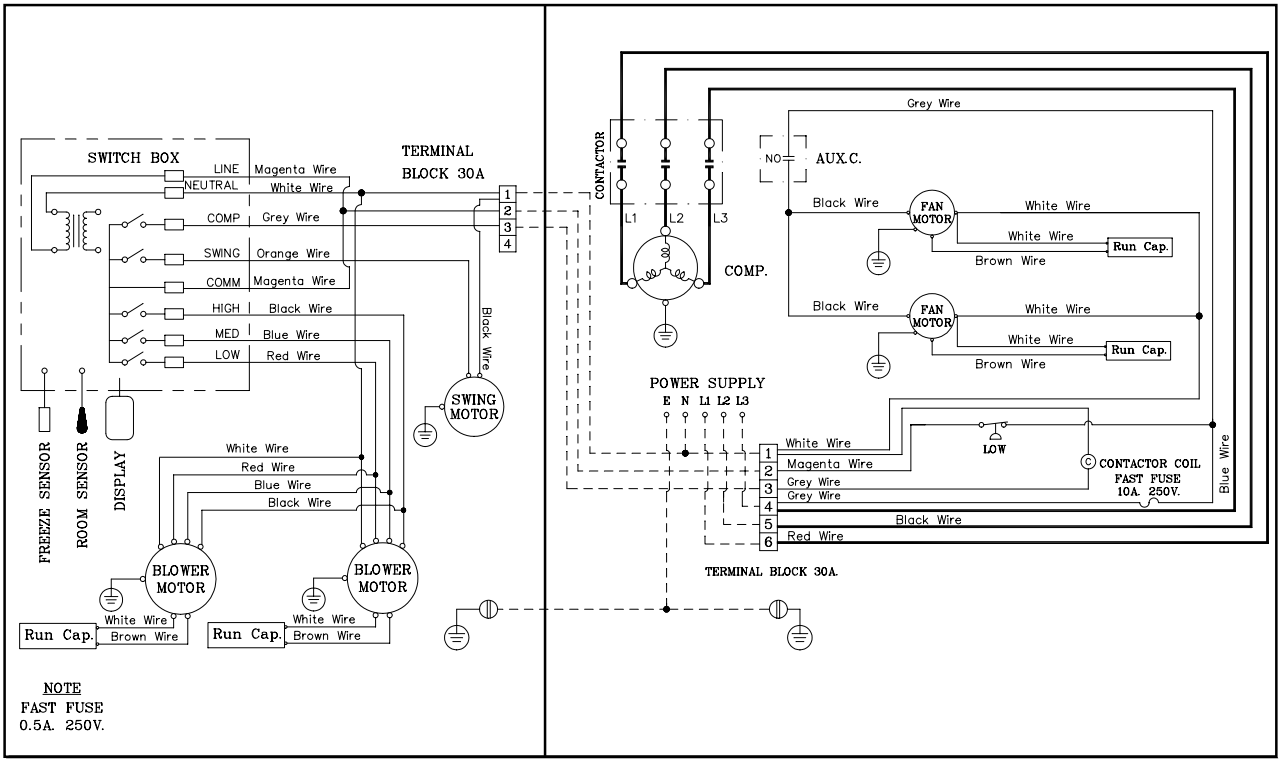

7. Wiring Diagrams

Model No.: LV-H368KLA0

Indoor Unit

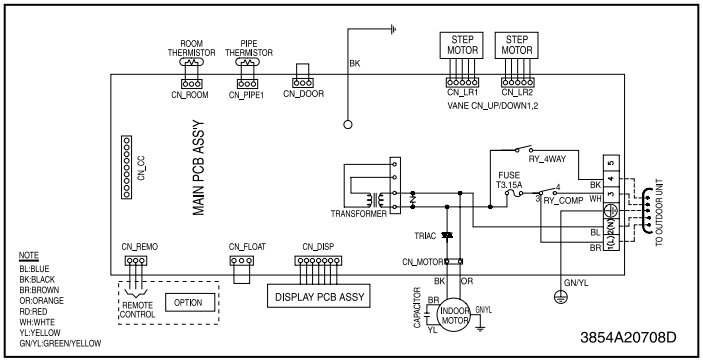

Outdoor Unit

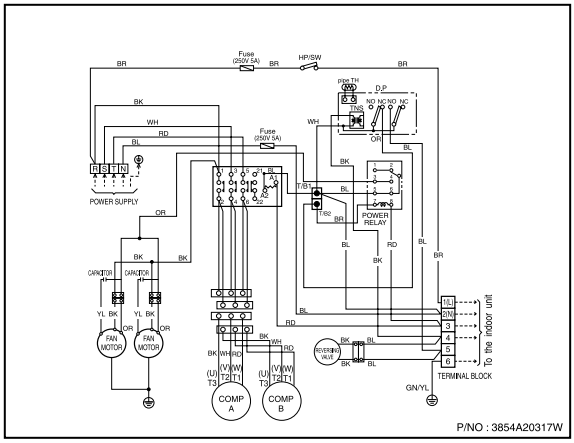

Model No.: LV-H368KLB0

Indoor Unit

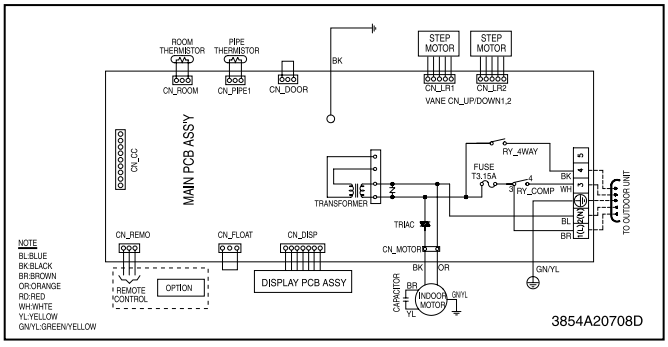

Outdoor Unit

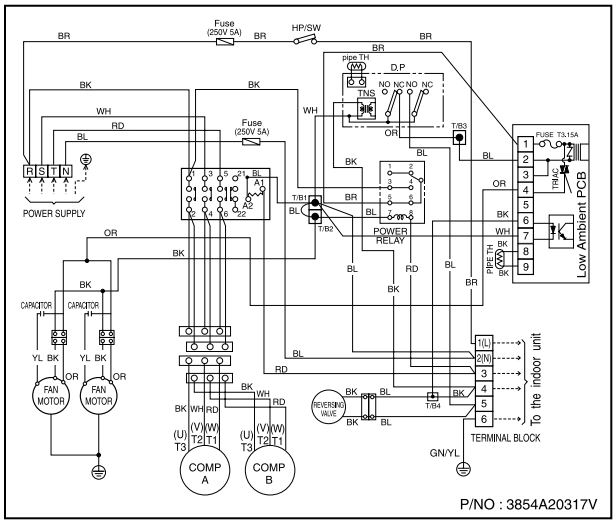

Model No.: LV-H488LLA0

Indoor Unit

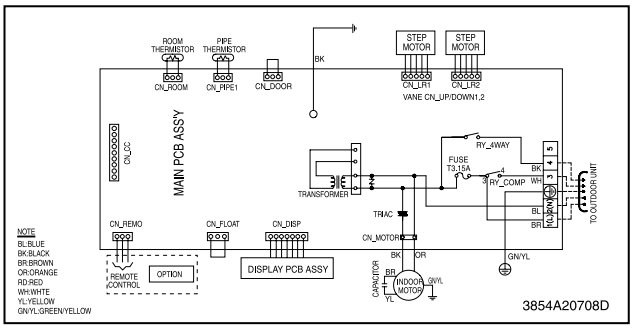

Outdoor Unit

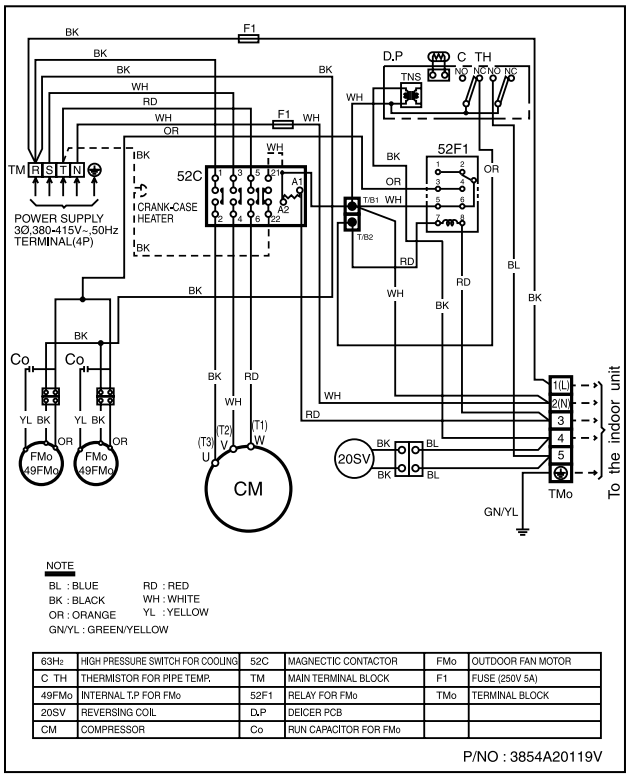

63Hz	HIGH PRESSURE SWITCH FOR COOLING	52C	MAGNECTIC CONTACTOR	FMo	OUTDOOR FAN MOTOR
C TH	THERMISTOR FOR PIPE TEMP.	TM	MAIN TERMINAL BLOCK	F1	FUSE (250V 5A)
49FMo	INTERNAL T.P FOR FMo	52F1	RELAY FOR FMo	TMo	TERMINAL BLOCK
20SV	REVERSING COIL	D.P	DEICER PCB		
CM	COMPRESSOR	Co	RUN CAPACITOR FOR FMo		

Model No.: LV-H488LLB0

Indoor Unit

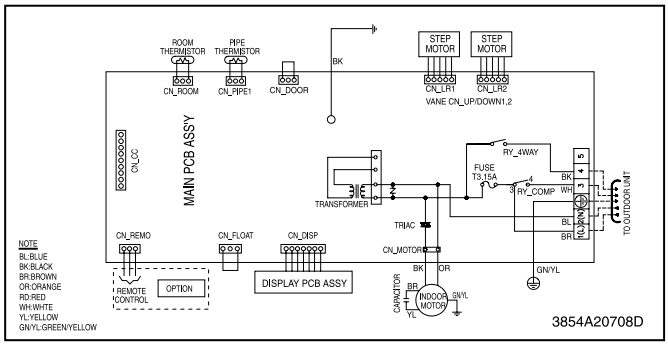

Outdoor Unit

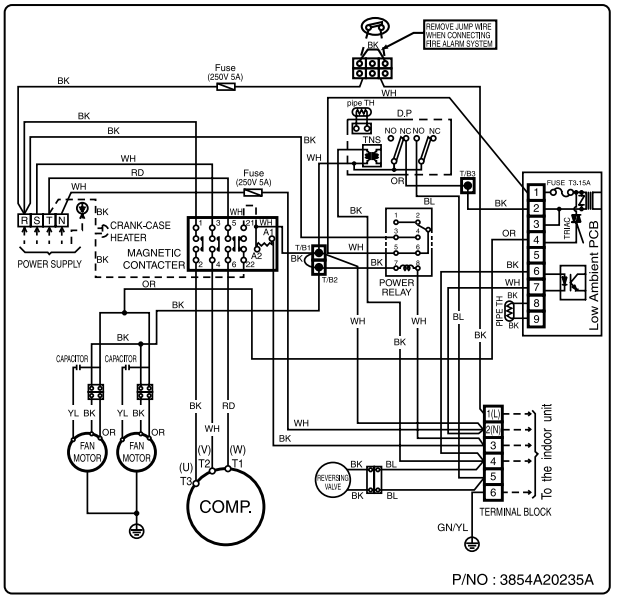

7. Wiring Diagrams

Model No.: LV-H608LLA(B)0

Indoor Unit

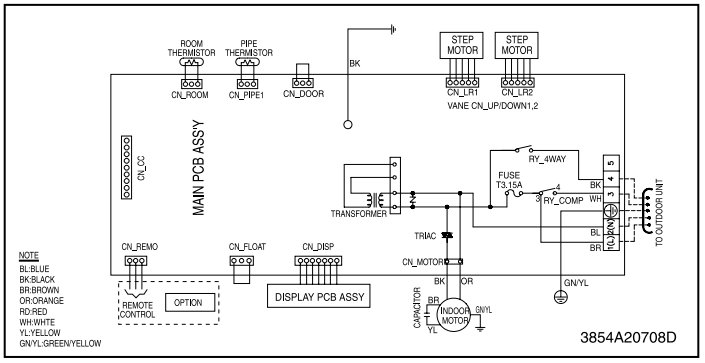

Outdoor Unit

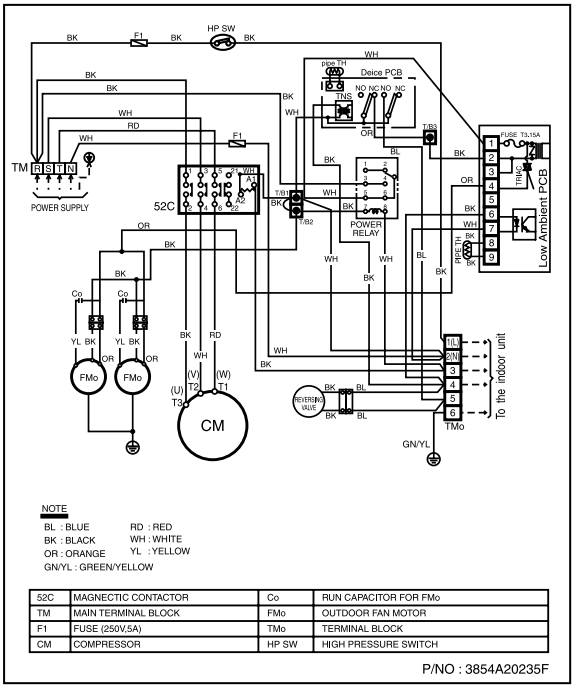

52C	MAGNECTIC CONTACTOR	Co	RUN CAPACITOR FOR FMo
TM	MAIN TERMINAL BLOCK	FMo	OUTDOOR FAN MOTOR
F1	FUSE (250V,5A)	TMo	TERMINAL BLOCK
CM	COMPRESSOR	HP SW	HIGH PRESSURE SWITCH

Model No.: LV-C368KLA0

Indoor Unit

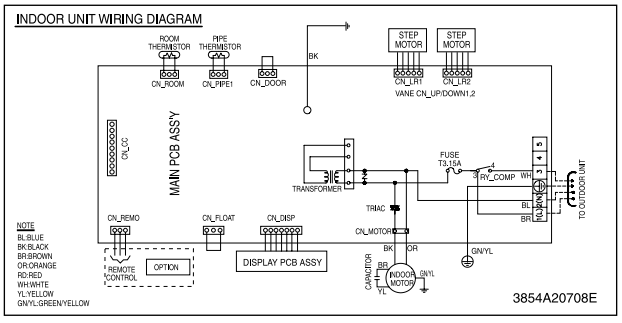

Outdoor Unit

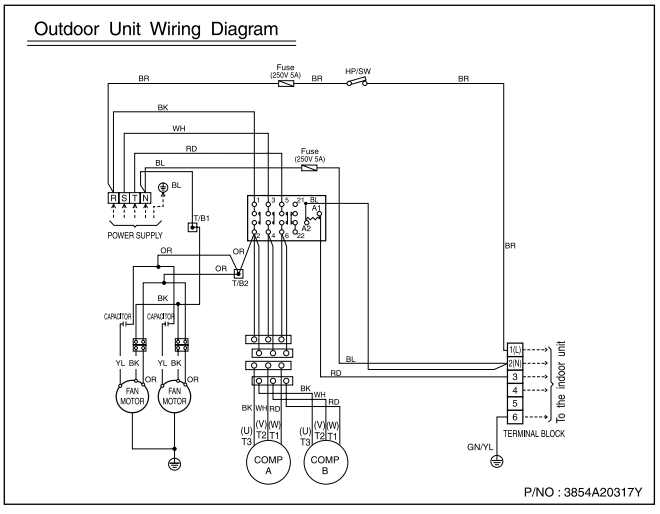

Model No.: LV-C368KLB0

Indoor Unit

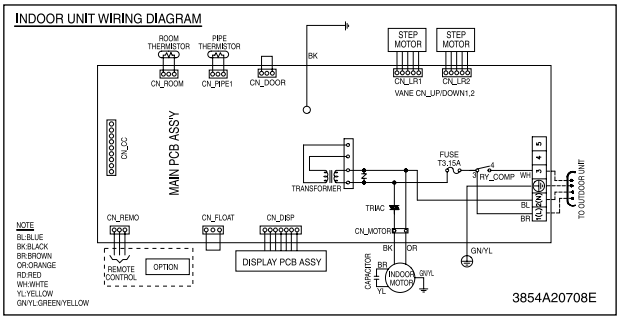

Outdoor Unit

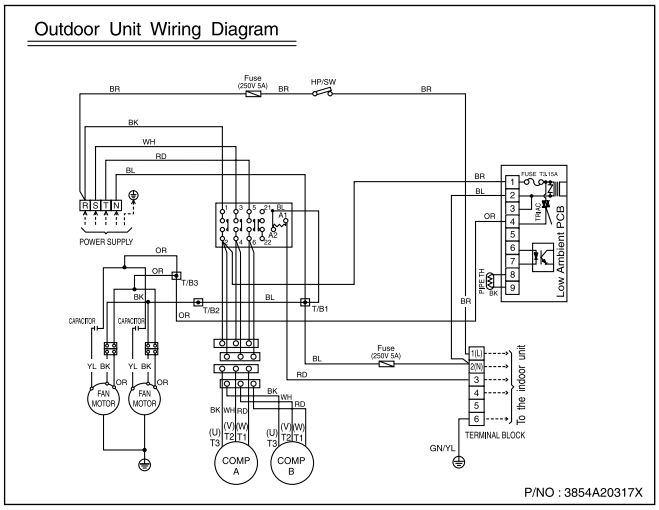

Model No.: LV-C488LLA0

Indoor Unit

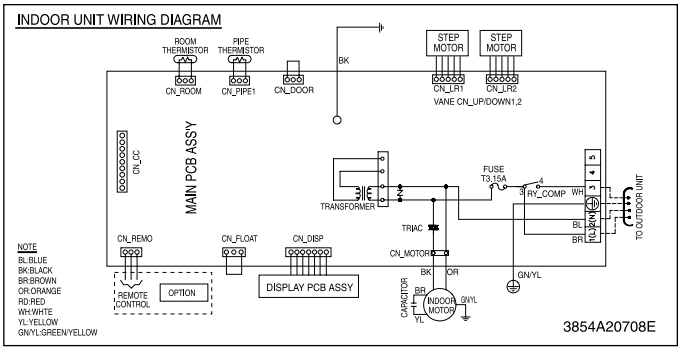

Outdoor Unit

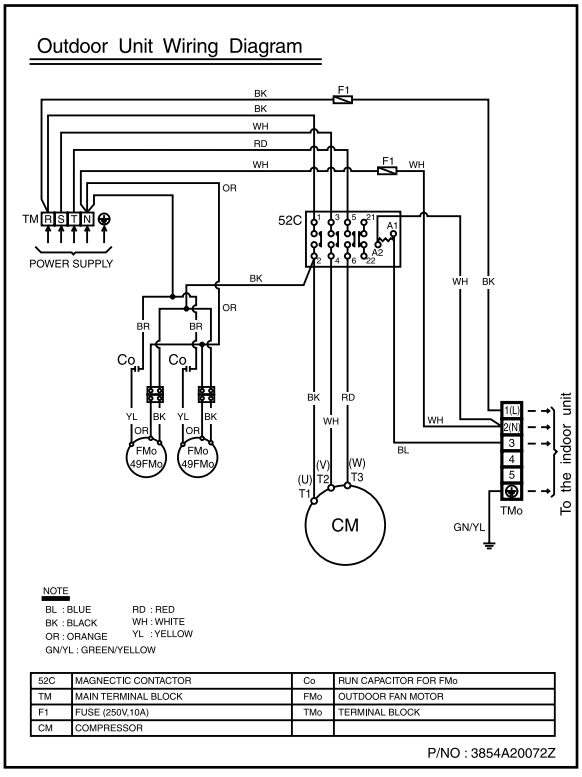

7. Wiring Diagrams

Model No.: LV-C488LLB0

Indoor Unit

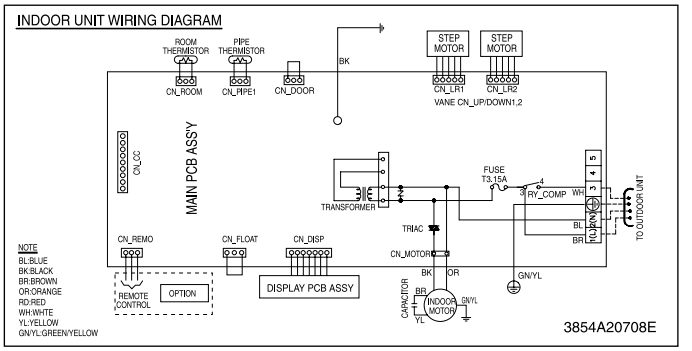

Outdoor Unit

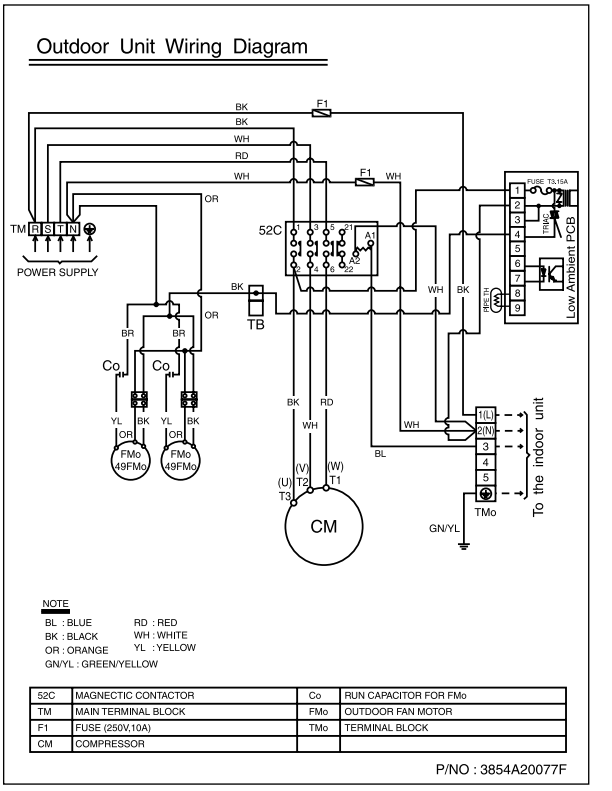

52C	MAGNECTIC CONTACTOR	Co	RUN CAPACITOR FOR FMo
TM	MAIN TERMINAL BLOCK	FMo	OUTDOOR FAN MOTOR
F1	FUSE (250V,10A)	TMo	TERMINAL BLOCK
CM	COMPRESSOR		

Model No.: LV-C608LLA(B)0

Indoor Unit

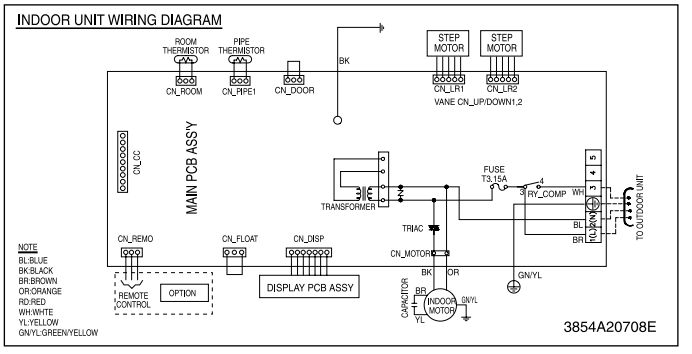

Outdoor Unit

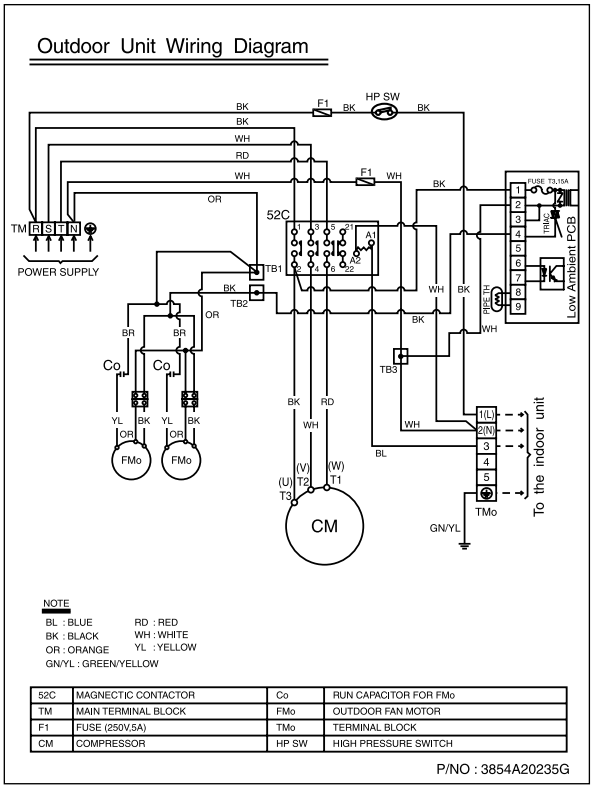

52C	MAGNECTIC CONTACTOR	Co	RUN CAPACITOR FOR FMo
TM	MAIN TERMINAL BLOCK	FMo	OUTDOOR FAN MOTOR
F1	FUSE (250V,5A)	TMo	TERMINAL BLOCK
CM	COMPRESSOR	HP SW	HIGH PRESSURE SWITCH

7. Wiring Diagrams

Model No.: LV-C368KLA1

Indoor Unit

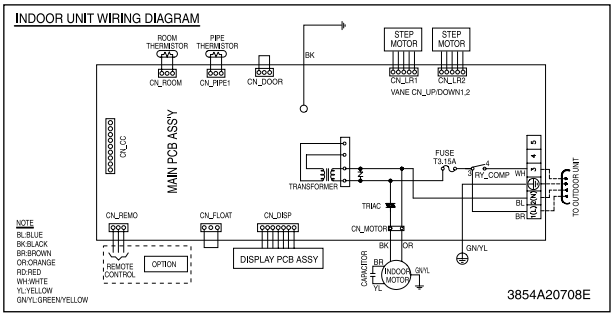

Outdoor Unit

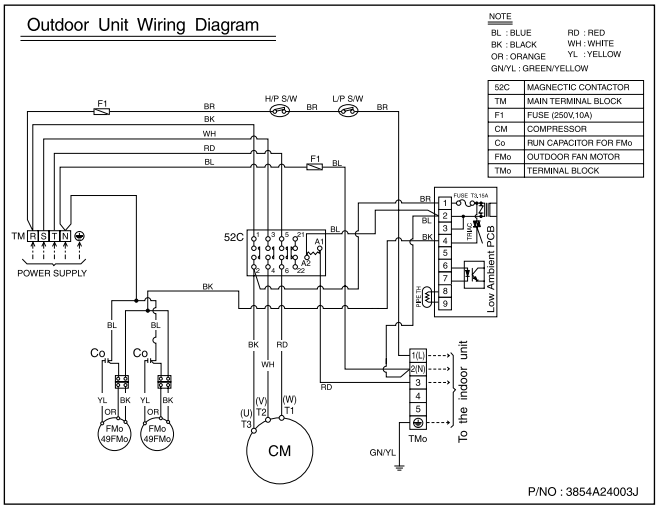

Model No.: LV-C488LLA1

Indoor Unit

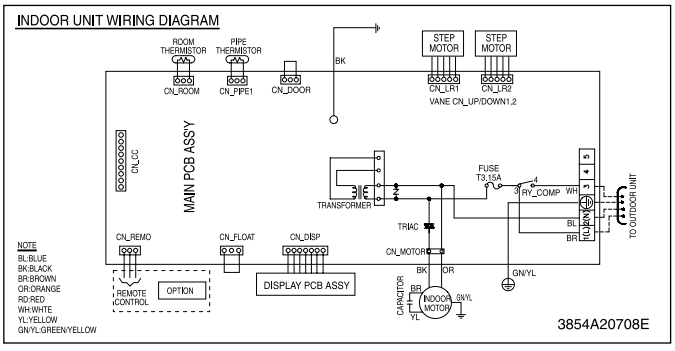

Outdoor Unit

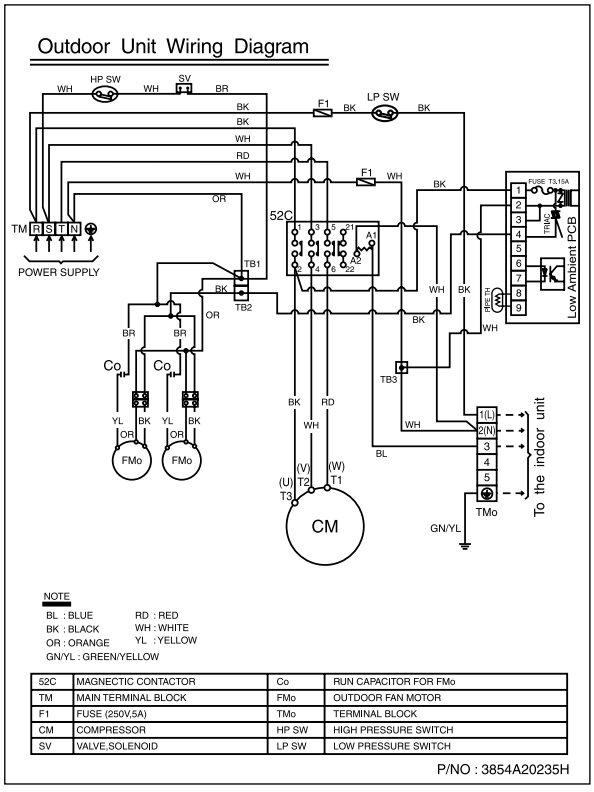

7. Wiring Diagrams

Model No.: LV-C608LLA1

Indoor Unit

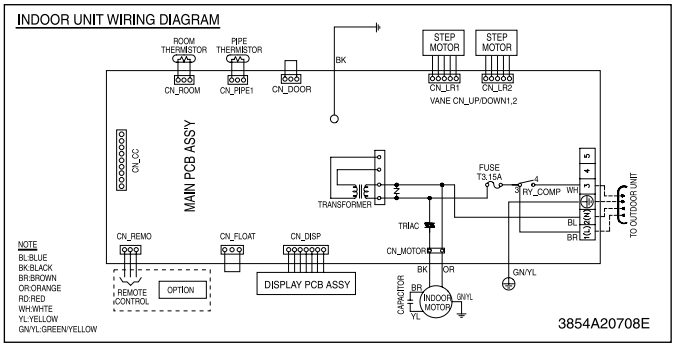

Outdoor Unit

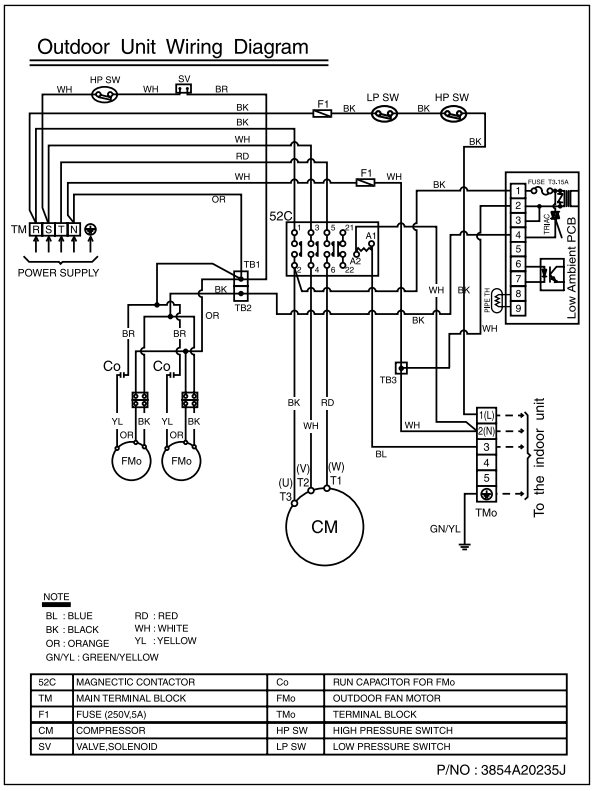

52C	MAGNECTIC CONTACTOR	Co	RUN CAPACITOR FOR FMo
TM	MAIN TERMINAL BLOCK	FMo	OUTDOOR FAN MOTOR
F1	FUSE (250V,5A)	TMo	TERMINAL BLOCK
CM	COMPRESSOR	HP SW	HIGH PRESSURE SWITCH
SV	VALVE,SOLENOID	LP SW	LOW PRESSURE SWITCH

8. Refrigerant Cycle Diagrams

Model No.: LV-B18(24)64CL, LV-B2860CL

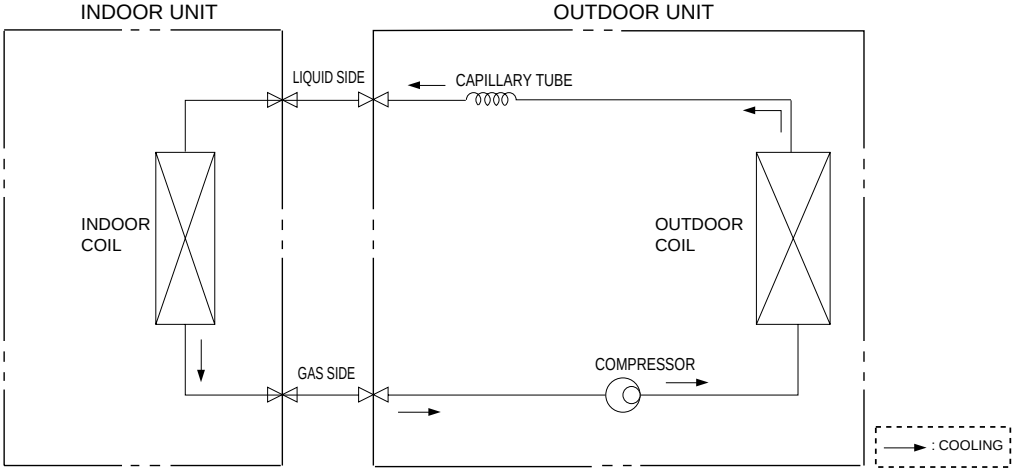

Model No.	Pipe size(Diameter:Ø) (inch)		Piping length(m)		Elevation(m)	
	Gas	Liquid	Rated	Max	Rated	Max
LV-B1864CL	1/2"	1/4"	7.5	15	5	8
LV-B2464CL	5/8"	1/4"	7.5	20	5	8
LV-B2860CL	5/8"	3/8"	5	20	5	8

Model No.: LV-B18(24)64H(B)L, LV-B2860HL

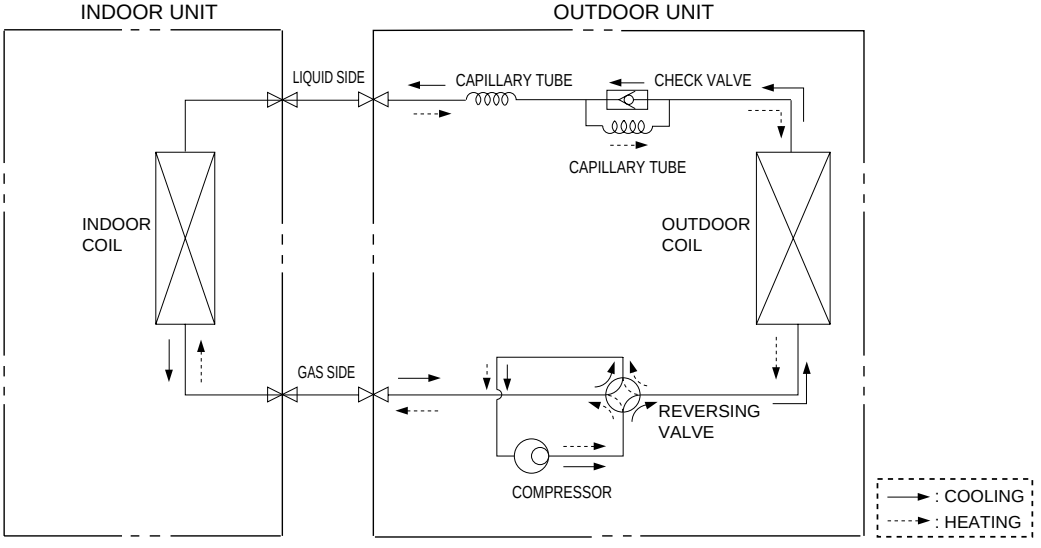

Model No.	Pipe size(Diameter:Ø) (inch)		Piping length(m)		Elevation(m)	
	Gas	Liquid	Rated	Max	Rated	Max
LV-B1864H(B)L	1/2"	1/4"	7.5	15	5	8
LV-B2464H(B)L	5/8"	1/4"	7.5	20	5	8
LV-B2860HL	5/8"	3/8"	5	20	5	8

8. Refrigerant Cycle Diagrams

Model No.: LV-C3681CL, LV-D4881CL, LV-D6081CL

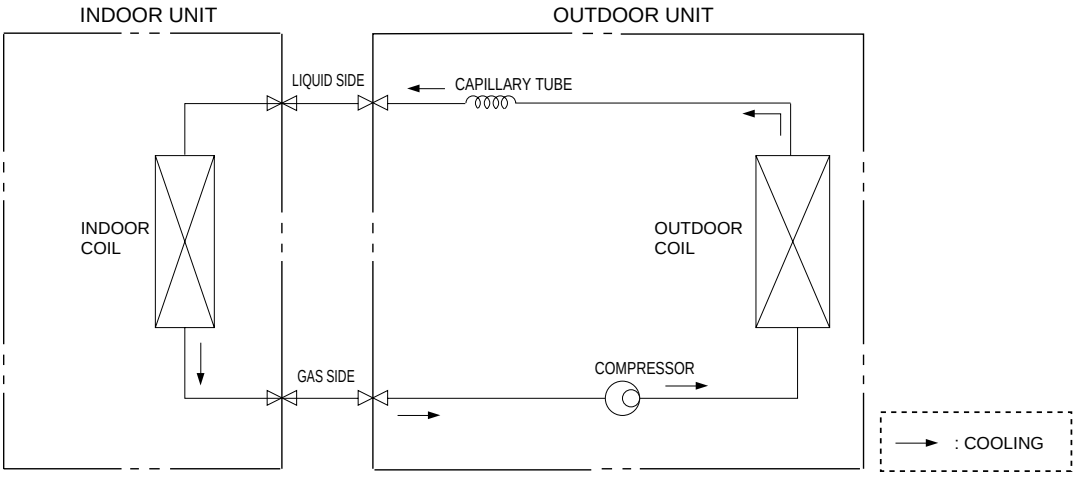

Model No.	Pipe size(Diameter:Ø) (inch)		Piping length(m)		Elevation(m)	
	Gas	Liquid	Rated	Max	Rated	Max
LV-C3681CL	3/4"	3/8"	5	20	5	10
LV-D4881CL	3/4"	1/2"	5	25	5	15
LV-D6081CL	3/4"	1/2"	5	30	5	20

Model No.: LV-C3681HL, LV-D4881HL, LV-D6081HL

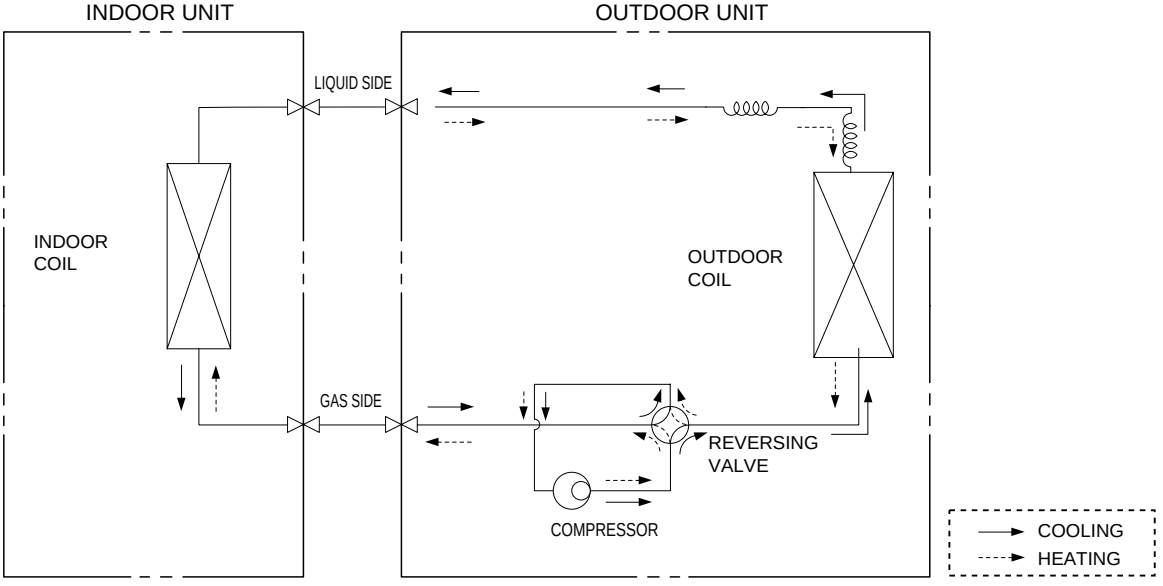

Model No.	Pipe size(Diameter:Ø) (inch)		Piping length(m)		Elevation(m)	
	Gas	Liquid	Rated	Max	Rated	Max
LV-C3681HL	3/4"	3/8"	5	20	5	10
LV-D4881HL	3/4"	1/2"	5	25	5	15
LV-D6081HL	3/4"	1/2"	5	30	5	20

Model No.: LV-C368KLA(B)0

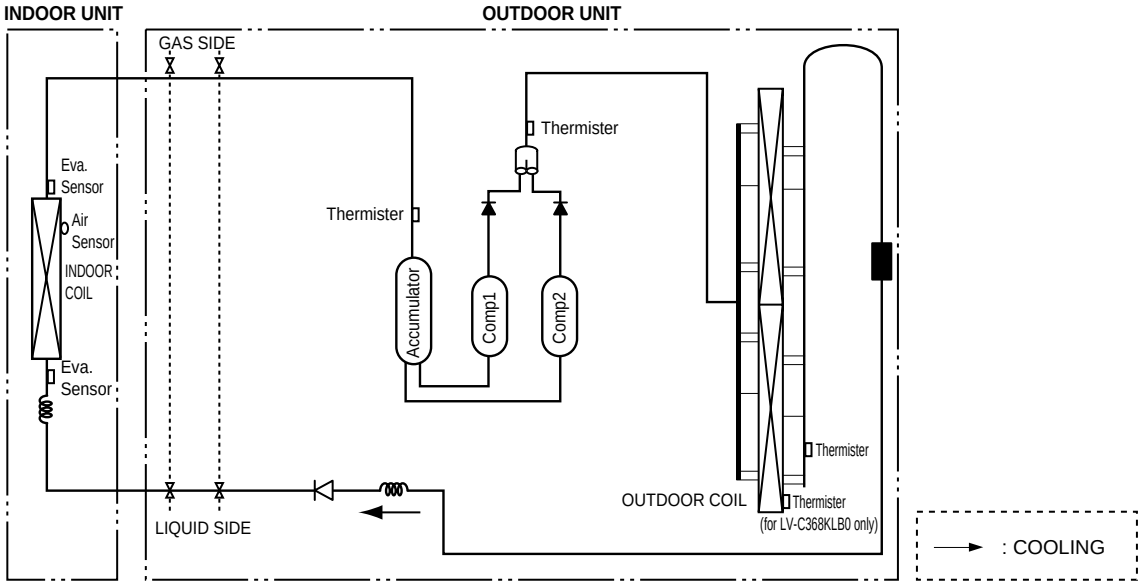

Model No.	Pipe size(Diameter:Ø) (inch)		Piping length(m)		Elevation(m)	
	Gas	Liquid	Rated	Max	Rated	Max
LV-C368KLA(B)0	5/8"	1/4"	5	30	5	20

Model No.: LV-H368KLA(B)0

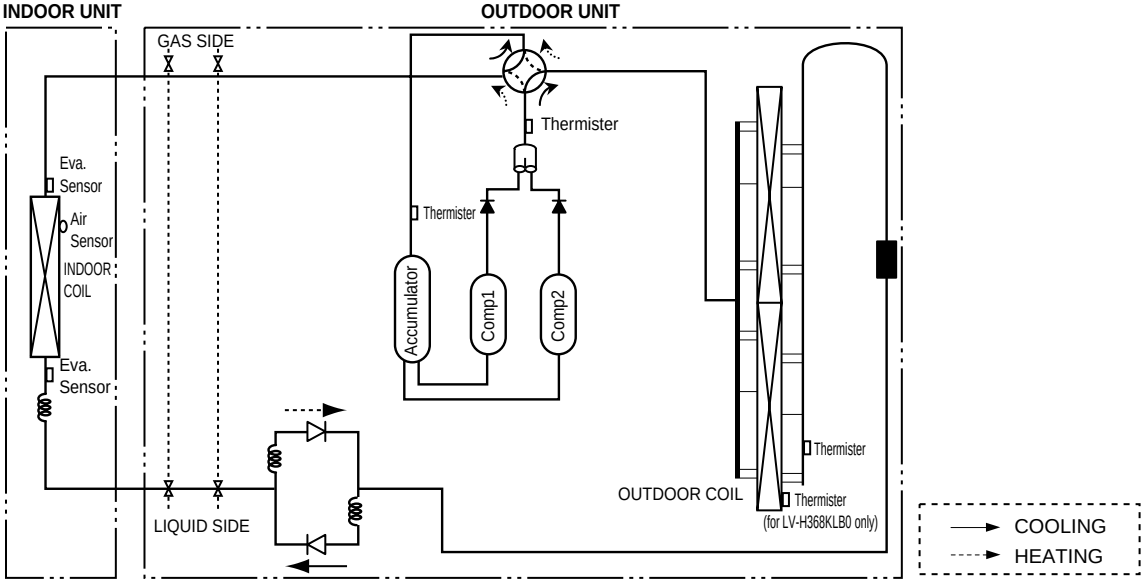

Model No.	Pipe size(Diameter:Ø) (inch)		Piping length(m)		Elevation(m)	
	Gas	Liquid	Rated	Max	Rated	Max
LV-H368KLA(B)0	5/8"	1/4"	5	30	5	20

8. Refrigerant Cycle Diagrams

Model No.: LV-C488LLA(B)0

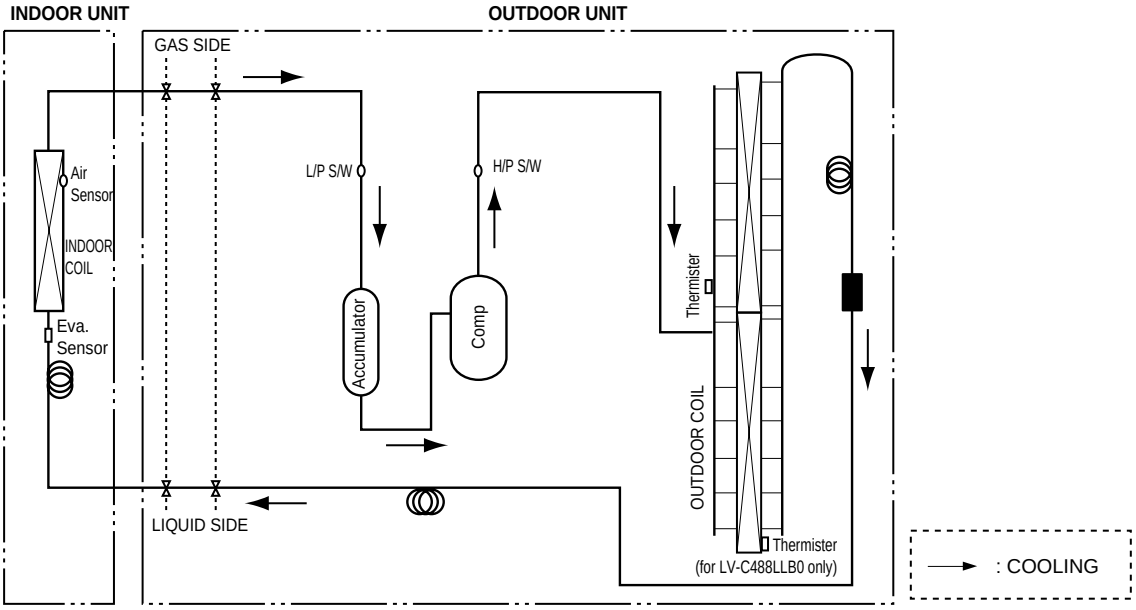

Model No.	Pipe size(Diameter:Ø) (inch)		Piping length(m)		Elevation(m)	
	Gas	Liquid	Rated	Max	Rated	Max
LV-C488LLA(B)0	3/4"	3/8"	5	50	5	30

Model No.: LV-H488LLA(B)0

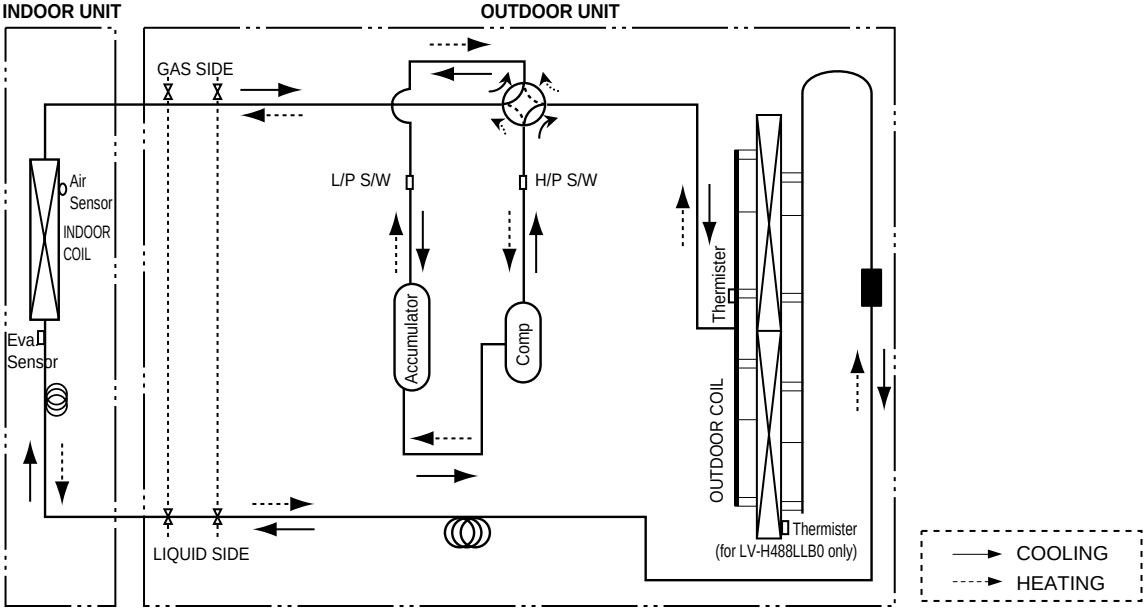

Model No.	Pipe size(Diameter:Ø) (inch)		Piping length(m)		Elevation(m)	
	Gas	Liquid	Rated	Max	Rated	Max
LV-H488LLA(B)0	3/4"	3/8"	5	50	5	30

Model No.: LV-C608LLA(B)0

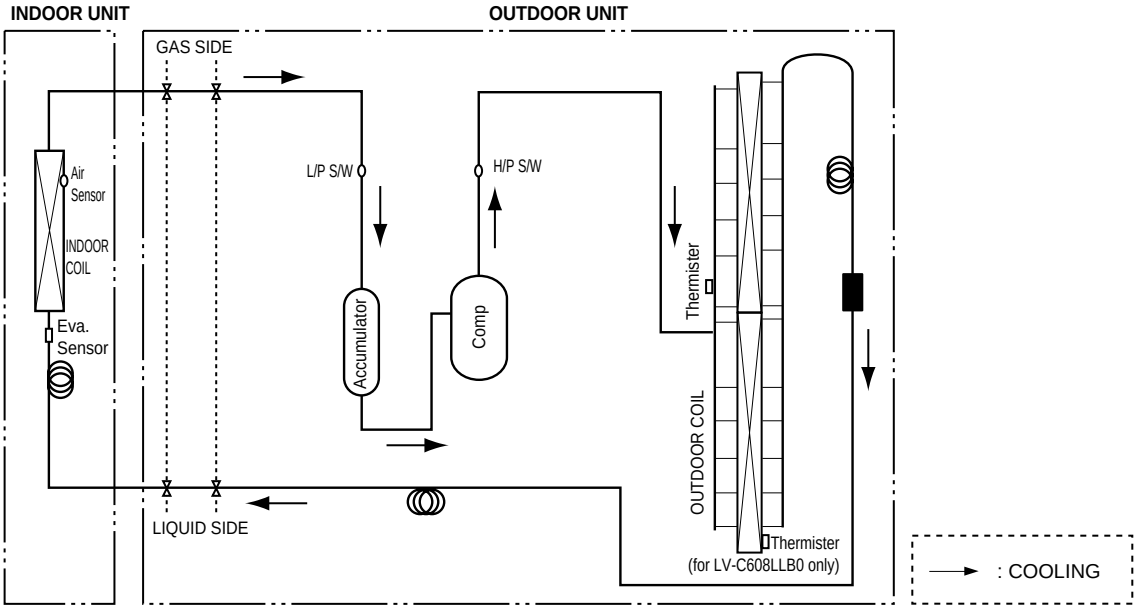

Model No.	Pipe size(Diameter:Ø) (inch)		Piping length(m)		Elevation(m)	
	Gas	Liquid	Rated	Max	Rated	Max
LV-C608LLA(B)0	3/4"	3/8"	5	30	5	20

Model No.: LV-H608LLA(B)0

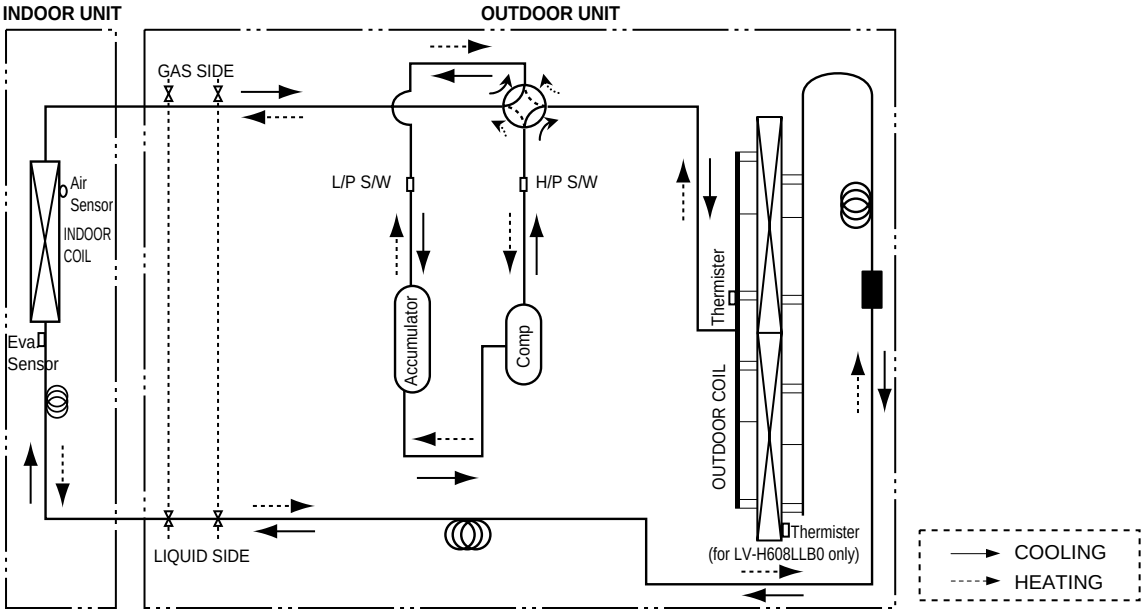

Model No.	Pipe size(Diameter:Ø) (inch)		Piping length(m)		Elevation(m)	
	Gas	Liquid	Rated	Max	Rated	Max
LV-H608LLA(B)0	3/4"	3/8"	5	30	5	20

8. Refrigerant Cycle Diagrams

Model No.: LV-C368KLA1

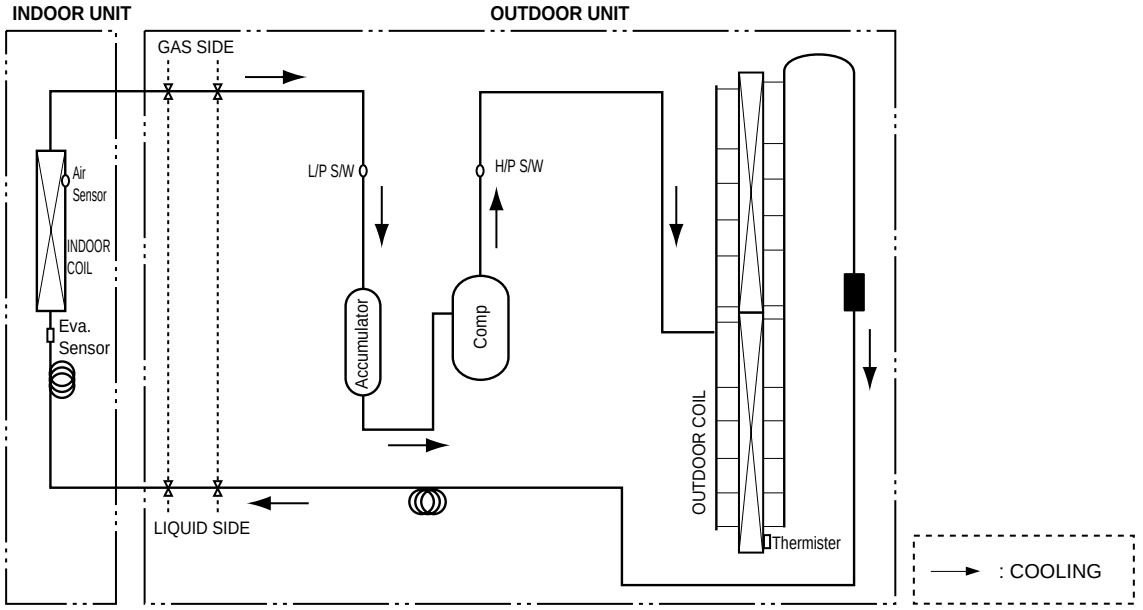

Model No.	Pipe size(Diameter:Ø) (inch)		Piping length(m)		Elevation(m)	
	Gas	Liquid	Rated	Max	Rated	Max
LV-C368KLA1	5/8"	1/4"	7.5	30	5	20

Model No.: LV-C48(60)8LLA1

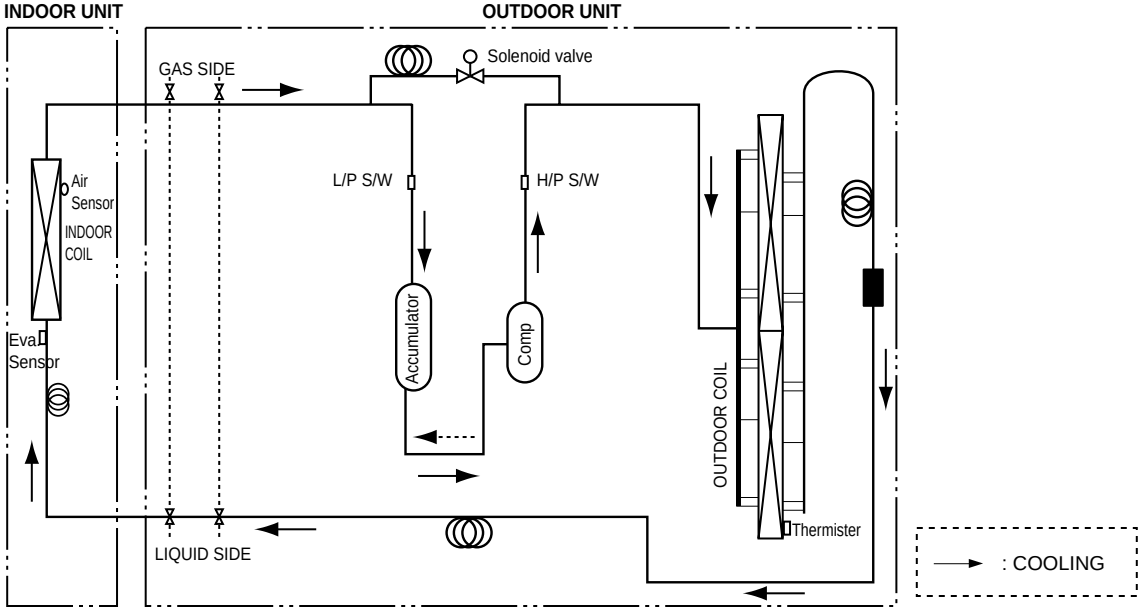

Model No.	Pipe size(Diameter:Ø) (inch)		Piping length(m)		Elevation(m)	
	Gas	Liquid	Rated	Max	Rated	Max
LV-C488LLA1	3/4"	3/8"	7.5	50	5	30
LV-C608LLA1	3/4"	3/8"	7.5	30	5	20

9. Selection Procedure

Step 1. Determine cooling load requirements at design conditions.

Required load conditions:
Required cooling capacity (TC).....25,000 Btu/h
Sensible capacity (SHC) .....19,000 Btu/h
Temperature air entering Outdoor Unit.....95°F
Temperature air entering Indoor Unit .....80°F DB/67°F WB
DB — dry bulb temperature
WB — wet bulb temperature

Step 2. Select unit based on required cooling capacity.

Based on Total Cooling Capacity, choose suitable model from the specification table.
The model with a nominal net capacity of 28,000 Btu/h cooling is selected.
The system consists of a LV-B2860CL.
Verify the unit performance at the given conditions in accordance with step #3.

Step 3. Determine if system selected satisfies cooling requirements.

Enter cooling capacities table on page 44 at high speed and 95°F outdoor entering air temperature with 80°F DB/67°F WB indoor entering air temperature.
Total cooling capacity = 28,000 Btu/h, Sensible capacity=21,600 Btu/h

To find capacity at intermediate conditions not in the table ;
Interpolation should be used when design conditions are between two numbers that are in the capacity table.
Extra-polation is not recommended.

If the interconnecting piping length is more than 7.5m ;
Find the capacity(%) at that particular interconnecting piping length from the coefficient of capacity change graph, on page 51.
Multiply coeffienct factor with Total Cooling Capacity & Sensible Capacity.

Ex: At 20m interconnecting piping length, from coefficient of capacity change graph, coeffienct factor is 0.94.

$$\text{Total Cooling Capacity} = \frac{\text{Capacity (\%) x Total Cooling Capacity}}{100} = \frac{94 \text{x} 28000}{100} = 26{,}320 \text{Btu/h}$$

$$\text{Sensible Capacity} = \frac{\text{Capacity (\%) x Sensible Capacity}}{100} = \frac{94 \text{x} 21600}{100} = 20{,}304 \text{Btu/h}$$

10. Performance Data

10.1 Cooling Capacity

Model No.: LV-B1864CL

Outdoor DB (°F)	85									95									105					
Indoor WB (°F)	61			67			73			61			67			73			61			67		
Indoor DB (°F)	TC	SHC	PI	TC	SHC	PI	TC	SHC	PI	TC	SHC	PI	TC	SHC	PI	TC	SHC	PI	TC	SHC	PI	TC	SHC	PI
75	16.8	14.6	1.62	18.6	11.0	1.67	20.0	4.9	1.70	16.0	14.6	1.79	17.7	11.1	1.84	19.0	4.9	1.88	15.1	13.9	1.91	16.6	10.5	1.97
80	17.6	16.7	1.62	18.9	13.8	1.67	20.0	9.0	1.70	16.7	16.7	1.79	18.0	13.9	1.85	19.0	9.1	1.88	15.7	15.7	1.92	16.9	13.2	1.98
85	18.2	18.2	1.63	19.2	16.6	1.68	20.0	12.5	1.71	17.3	17.3	1.80	18.3	16.7	1.86	19.0	12.6	1.89	16.3	16.3	1.93	17.2	15.9	1.99
90	18.8	18.8	1.63	19.4	18.5	1.68	19.8	15.2	1.71	17.9	17.9	1.80	18.5	18.5	1.86	18.8	15.3	1.90	16.8	16.8	1.93	17.4	17.4	1.99

Outdoor DB (°F)	105			115									125								
Indoor WB (°F)	73			61			67			73			61			67			73		
Indoor DB (°F)	TC	SHC	PI	TC	SHC	PI	TC	SHC	PI	TC	SHC	PI	TC	SHC	PI	TC	SHC	PI	TC	SHC	PI
75	17.9	4.6	2.01	14.0	13.3	2.02	15.5	10.1	2.09	16.6	4.5	2.13	12.3	12.1	2.12	13.6	9.2	2.18	14.6	4.0	2.22
80	17.9	8.6	2.02	14.6	14.6	2.03	15.8	12.6	2.09	16.6	8.3	2.13	12.9	12.9	2.12	13.9	11.5	2.19	14.7	7.5	2.23
85	17.9	11.9	2.02	15.2	15.2	2.04	16.0	15.2	2.10	16.6	11.4	2.14	13.3	13.3	2.13	14.1	13.8	2.20	14.6	10.4	2.24
90	17.7	14.5	2.03	15.7	15.7	2.04	16.2	16.2	2.11	16.5	13.9	2.15	13.8	13.8	2.13	14.2	14.2	2.20	14.5	12.6	2.24

Model No.: LV-B1864H(B)L

Outdoor DB (°F)	85									95									105					
Indoor WB (°F)	61			67			73			61			67			73			61			67		
Indoor DB (°F)	TC	SHC	PI	TC	SHC	PI	TC	SHC	PI	TC	SHC	PI	TC	SHC	PI	TC	SHC	PI	TC	SHC	PI	TC	SHC	PI
75	17.8	15.4	1.62	19.6	11.6	1.67	21.1	5.1	1.70	16.9	15.4	1.79	18.7	11.7	1.84	20.1	5.2	1.88	15.9	14.7	1.91	17.6	11.1	1.97
80	18.5	17.6	1.62	20.0	14.6	1.67	21.1	9.5	1.70	17.6	17.6	1.79	19.0	14.6	1.85	20.1	9.6	1.88	16.6	16.6	1.92	17.9	13.9	1.98
85	19.2	19.2	1.63	20.3	17.5	1.68	21.1	13.2	1.71	18.3	18.3	1.80	19.3	17.6	1.86	20.0	13.3	1.89	17.2	17.2	1.93	18.1	16.7	1.99
90	19.9	19.9	1.63	20.5	19.5	1.68	20.9	16.1	1.71	18.9	18.9	1.80	19.5	19.5	1.86	19.9	16.1	1.90	17.8	17.8	1.93	18.3	18.3	1.99

Outdoor DB (°F)	105			115									125								
Indoor WB (°F)	73			61			67			73			61			67			73		
Indoor DB (°F)	TC	SHC	PI	TC	SHC	PI	TC	SHC	PI	TC	SHC	PI	TC	SHC	PI	TC	SHC	PI	TC	SHC	PI
75	18.9	4.9	2.01	14.8	14.1	2.02	16.3	10.6	2.09	17.6	4.7	2.13	13.0	12.8	2.12	14.4	9.7	2.18	15.5	4.3	2.22
80	18.9	9.1	2.02	15.4	15.4	2.03	16.6	13.3	2.09	17.6	8.7	2.13	13.6	13.6	2.12	14.6	12.1	2.19	15.5	7.9	2.23
85	18.8	12.6	2.02	16.0	16.0	2.04	16.9	16.1	2.10	17.5	12.1	2.14	14.1	14.1	2.13	14.9	14.6	2.20	15.4	11.0	2.24
90	18.7	15.3	2.03	16.5	16.5	2.04	17.1	17.1	2.11	17.4	14.7	2.15	14.5	14.5	2.13	15.0	15.0	2.20	15.3	13.3	2.24

Model No.: LV-B2464CL

Outdoor DB (°F)	85									95									105					
Indoor WB (°F)	61			67			73			61			67			73			61			67		
Indoor DB (°F)	TC	SHC	PI	TC	SHC	PI	TC	SHC	PI	TC	SHC	PI	TC	SHC	PI	TC	SHC	PI	TC	SHC	PI	TC	SHC	PI
75	22.4	18.7	2.14	24.8	14.1	2.21	26.7	6.2	2.25	21.3	18.7	2.37	23.6	14.2	2.44	25.3	6.3	2.49	20.1	17.8	2.53	22.2	13.5	2.61
80	23.4	21.4	2.15	25.3	17.7	2.22	26.7	11.6	2.26	22.2	21.5	2.38	24.0	17.8	2.45	25.4	11.6	2.50	20.9	20.4	2.54	22.6	16.9	2.62
85	24.3	23.5	2.15	25.6	21.3	2.22	26.6	16.0	2.26	23.1	23.1	2.38	24.3	21.4	2.46	25.3	16.1	2.50	21.7	21.7	2.55	22.9	20.3	2.63
90	25.1	24.7	2.16	25.9	23.7	2.23	26.4	19.5	2.27	23.8	23.8	2.39	24.6	23.8	2.46	25.1	19.6	2.51	22.4	22.4	2.56	23.2	22.6	2.64

Outdoor DB (°F)	105			115									125								
Indoor WB (°F)	73			61			67			73			61			67			73		
Indoor DB (°F)	TC	SHC	PI	TC	SHC	PI	TC	SHC	PI	TC	SHC	PI	TC	SHC	PI	TC	SHC	PI	TC	SHC	PI
75	23.9	6.0	2.66	18.7	17.1	2.68	20.6	12.9	2.76	22.2	5.7	2.82	16.4	15.5	2.80	18.2	11.7	2.89	19.5	5.2	2.94
80	23.9	11.1	2.67	19.5	19.5	2.69	21.0	16.2	2.77	22.2	10.6	2.82	17.1	17.1	2.81	18.5	14.7	2.90	19.5	9.6	2.95
85	23.8	15.3	2.68	20.2	20.2	2.70	21.3	19.5	2.78	22.1	14.7	2.83	17.8	17.8	2.82	18.8	17.7	2.91	19.5	13.3	2.96
90	23.7	18.6	2.69	20.9	20.9	2.70	21.5	21.5	2.79	22.0	17.9	2.84	18.4	18.4	2.83	19.0	19.0	2.92	19.4	16.2	2.97

Notes: 1. All capacites are net, evaporator fan motor heat is deducted.
2. DB=Dry Bulb Temperature(°F), WB=Wet Bulb Temperature(°F)
3. TC=Total cooling capacity(Unit:kBtu/h)
4. SHC=Sensible heat capacity(Unit:kBtu/h)
5. PI=Power Input(Comp.+ indoor fan motor+outdoor fan motor) (kW)

Model No.: LV-B2464H(B)L

Outdoor DB (°F)	85									95									105					
Indoor WB (°F)	61			67			73			61			67			73			61			67		
Indoor DB (°F)	TC	SHC	PI	TC	SHC	PI	TC	SHC	PI	TC	SHC	PI	TC	SHC	PI	TC	SHC	PI	TC	SHC	PI	TC	SHC	PI
75	22.4	18.7	2.33	24.8	14.1	2.41	26.7	6.2	2.45	21.3	18.7	2.58	23.6	14.2	2.66	25.3	6.3	2.71	20.1	17.8	2.76	22.2	13.5	2.85
80	23.4	21.4	2.34	25.3	17.7	2.42	26.7	11.6	2.46	22.2	21.5	2.59	24.0	17.8	2.67	25.4	11.6	2.72	20.9	20.4	2.77	22.6	16.9	2.86
85	24.3	23.5	2.35	25.6	21.3	2.42	26.6	16.0	2.47	23.1	23.1	2.60	24.3	21.4	2.68	25.3	16.1	2.73	21.7	21.7	2.78	22.9	20.3	2.87
90	25.1	24.7	2.36	25.9	23.7	2.43	26.4	19.5	2.47	23.8	23.8	2.60	24.6	23.8	2.69	25.1	19.6	2.74	22.4	22.4	2.79	23.2	22.6	2.88

Outdoor DB (°F)	105			115									125								
Indoor WB (°F)	73			61			67			73			61			67			73		
Indoor DB (°F)	TC	SHC	PI	TC	SHC	PI	TC	SHC	PI	TC	SHC	PI	TC	SHC	PI	TC	SHC	PI	TC	SHC	PI
75	23.9	6.0	2.90	18.7	17.1	2.92	20.6	12.9	3.01	22.2	5.7	3.07	16.4	15.5	3.05	18.2	11.7	3.15	19.5	5.2	3.21
80	23.9	11.1	2.91	19.5	19.5	2.93	21.0	16.2	3.02	22.2	10.6	3.08	17.1	17.1	3.06	18.5	14.7	3.16	19.5	9.6	3.22
85	23.8	15.3	2.92	20.2	20.2	2.94	21.3	19.5	3.03	22.1	14.7	3.09	17.8	17.8	3.07	18.8	17.7	3.17	19.5	13.3	3.23
90	23.7	18.6	2.93	20.9	20.9	2.95	21.5	21.5	3.04	22.0	17.9	3.10	18.4	18.4	3.08	19.0	19.0	3.18	19.4	16.2	3.24

Model No.: LV-B2860C(H)L

Outdoor DB (°F)	85									95									105					
Indoor WB (°F)	61			67			73			61			67			73			61			67		
Indoor DB (°F)	TC	SHC	PI	TC	SHC	PI	TC	SHC	PI	TC	SHC	PI	TC	SHC	PI	TC	SHC	PI	TC	SHC	PI	TC	SHC	PI
75	26.2	22.6	2.49	28.9	17.1	2.57	31.1	7.6	2.62	24.9	22.7	2.75	27.5	17.2	2.84	29.6	7.6	2.89	23.4	21.6	2.95	25.9	16.4	3.04
80	27.3	26.0	2.50	29.5	21.5	2.58	31.1	14.1	2.63	26.0	26.0	2.76	28.0	21.6	2.85	29.6	14.1	2.90	24.4	24.4	2.96	26.4	20.5	3.05
85	28.3	28.3	2.51	29.9	25.9	2.59	31.0	19.5	2.63	26.9	26.9	2.77	28.4	26.0	2.86	29.5	19.5	2.91	25.4	25.4	2.97	26.7	24.7	3.06
90	29.3	29.3	2.51	30.2	28.7	2.59	30.9	23.7	2.64	27.8	27.8	2.78	28.7	28.7	2.87	29.3	23.8	2.92	26.2	26.2	2.98	27.0	27.0	3.07

Outdoor DB (°F)	105			115									125								
Indoor WB (°F)	73			61			67			73			61			67			73		
Indoor DB (°F)	TC	SHC	PI	TC	SHC	PI	TC	SHC	PI	TC	SHC	PI	TC	SHC	PI	TC	SHC	PI	TC	SHC	PI
75	27.8	7.2	3.10	21.8	20.7	3.12	24.1	15.7	3.22	25.9	6.9	3.28	19.2	18.8	3.26	21.2	14.2	3.36	22.8	6.3	3.42
80	27.9	13.4	3.11	22.7	22.7	3.13	24.5	19.7	3.23	25.9	12.9	3.29	20.0	20.0	3.27	21.6	17.8	3.37	22.8	11.7	3.43
85	27.8	18.6	3.12	23.6	23.6	3.14	24.9	23.7	3.24	25.8	17.8	3.30	20.8	20.8	3.28	21.9	21.5	3.38	22.7	16.1	3.44
90	27.6	22.6	3.13	24.4	24.4	3.15	25.1	25.1	3.24	25.7	21.7	3.30	21.4	21.4	3.29	22.1	22.1	3.39	22.6	19.7	3.46

Model No.: LV-C3681CL

Outdoor DB (°F)	85									95									105					
Indoor WB (°F)	61			67			73			61			67			73			61			67		
Indoor DB (°F)	TC	SHC	PI	TC	SHC	PI	TC	SHC	PI	TC	SHC	PI	TC	SHC	PI	TC	SHC	PI	TC	SHC	PI	TC	SHC	PI
75	33.7	29.1	2.46	37.2	22.0	2.53	40.0	9.7	2.58	32.0	29.2	2.72	35.4	22.1	2.80	38.0	9.8	2.85	30.1	27.8	2.91	33.3	21.0	3.00
80	35.1	33.4	2.46	37.9	27.6	2.54	40.0	18.1	2.59	33.4	33.4	2.72	36.0	27.7	2.81	38.0	18.2	2.86	31.4	31.4	2.92	33.9	26.4	3.01
85	36.4	36.4	2.47	38.4	33.2	2.55	39.9	25.0	2.60	34.6	34.6	2.73	36.5	33.4	2.82	37.9	25.1	2.87	32.6	32.6	2.92	34.4	31.7	3.02
90	37.6	37.6	2.48	38.8	36.9	2.56	39.7	30.5	2.60	35.8	35.8	2.74	36.9	36.9	2.83	37.7	30.6	2.88	33.7	33.7	2.93	34.7	34.7	3.03

Outdoor DB (°F)	105			115									125								
Indoor WB (°F)	73			61			67			73			61			67			73		
Indoor DB (°F)	TC	SHC	PI	TC	SHC	PI	TC	SHC	PI	TC	SHC	PI	TC	SHC	PI	TC	SHC	PI	TC	SHC	PI
75	35.8	9.3	3.05	28.0	26.6	3.07	31.0	20.2	3.17	33.3	8.9	3.23	24.6	24.2	3.21	27.3	18.3	3.31	29.3	8.1	3.38
80	35.8	17.3	3.06	29.2	29.2	3.08	31.5	25.3	3.18	33.3	16.5	3.24	25.7	25.7	3.22	27.7	22.9	3.32	29.3	15.0	3.39
85	35.7	23.9	3.07	30.3	30.3	3.09	32.0	30.4	3.19	33.2	22.9	3.25	26.7	26.7	3.23	28.1	27.6	3.33	29.2	20.8	3.40
90	35.5	29.1	3.08	31.3	31.3	3.10	32.3	32.3	3.20	33.0	27.9	3.26	27.6	27.6	3.24	28.4	28.4	3.34	29.1	25.3	3.41

Notes: 1. All capacites are net, evaporator fan motor heat is deducted.
2. DB=Dry Bulb Temperature(°F), WB=Wet Bulb Temperature(°F)
3. TC=Total cooling capacity(Unit:kBtu/h)
4. SHC=Sensible heat capacity(Unit:kBtu/h)
5. PI=Power Input(Comp.+ indoor fan motor+outdoor fan motor) (kW)

10. Performance Data

Model No.: LV-C3681HL

Outdoor DB (°F)	85									95									105					
Indoor WB (°F)	61			67			73			61			67			73			61			67		
Indoor DB (°F)	TC	SHC	PI	TC	SHC	PI	TC	SHC	PI	TC	SHC	PI	TC	SHC	PI	TC	SHC	PI	TC	SHC	PI	TC	SHC	PI
75	33.7	29.1	2.71	37.2	22.0	2.80	40.0	9.7	2.85	32.0	29.2	3.00	35.4	22.1	3.09	38.0	9.8	3.15	30.1	27.8	3.21	33.3	21.0	3.31
80	35.1	33.4	2.72	37.9	27.6	2.80	40.0	18.1	2.86	33.4	33.4	3.01	36.0	27.7	3.10	38.0	18.2	3.16	31.4	31.4	3.22	33.9	26.4	3.32
85	36.4	36.4	2.73	38.4	33.2	2.81	39.9	25.0	2.86	34.6	34.6	3.01	36.5	33.4	3.11	37.9	25.1	3.17	32.6	32.6	3.23	34.4	31.7	3.33
90	37.6	37.6	2.73	38.8	36.9	2.82	39.7	30.5	2.87	35.8	35.8	3.02	36.9	36.9	3.12	37.7	30.6	3.18	33.7	33.7	3.24	34.7	34.7	3.34

Outdoor DB (°F)	105			115									125								
Indoor WB (°F)	73			61			67			73			61			67			73		
Indoor DB (°F)	TC	SHC	PI	TC	SHC	PI	TC	SHC	PI	TC	SHC	PI	TC	SHC	PI	TC	SHC	PI	TC	SHC	PI
75	35.8	9.3	3.37	28.0	26.6	3.39	31.0	20.2	3.50	33.3	8.9	3.56	24.6	24.2	3.55	27.3	18.3	3.66	29.3	8.1	3.72
80	35.8	17.3	3.38	29.2	29.2	3.40	31.5	25.3	3.51	33.3	16.5	3.57	25.7	25.7	3.56	27.7	22.9	3.67	29.3	15.0	3.74
85	35.7	23.9	3.39	30.3	30.3	3.41	32.0	30.4	3.52	33.2	22.9	3.58	26.7	26.7	3.57	28.1	27.6	3.68	29.2	20.8	3.75
90	35.5	29.1	3.40	31.3	31.3	3.42	32.3	32.3	3.53	33.0	27.9	3.59	27.6	27.6	3.58	28.4	28.4	3.69	29.1	25.3	3.76

Model No.: LV-D4881CL

Outdoor DB (°F)	85									95									105					
Indoor WB (°F)	61			67			73			61			67			73			61			67		
Indoor DB (°F)	TC	SHC	PI	TC	SHC	PI	TC	SHC	PI	TC	SHC	PI	TC	SHC	PI	TC	SHC	PI	TC	SHC	PI	TC	SHC	PI
75	44.9	39.3	3.80	49.6	29.8	3.92	53.3	13.1	4.00	42.7	39.5	4.20	47.2	29.9	4.34	50.7	13.2	4.42	40.2	37.5	4.50	44.4	28.4	4.64
80	46.8	45.2	3.81	50.5	37.3	3.93	53.4	24.4	4.01	44.5	44.5	4.22	48.0	37.4	4.35	50.7	24.5	4.43	41.9	41.9	4.51	45.2	35.6	4.66
85	48.6	48.6	3.83	51.2	44.9	3.95	53.2	33.8	4.02	46.2	46.2	4.23	48.7	45.1	4.36	50.6	33.9	4.44	43.5	43.5	4.53	45.8	42.9	4.67
90	50.2	50.2	3.84	51.8	49.9	3.96	52.9	41.1	4.03	47.7	47.7	4.24	49.2	49.2	4.38	50.3	41.3	4.46	44.9	44.9	4.54	46.3	46.3	4.68

Outdoor DB (°F)	105			115									125								
Indoor WB (°F)	73			61			67			73			61			67			73		
Indoor DB (°F)	TC	SHC	PI	TC	SHC	PI	TC	SHC	PI	TC	SHC	PI	TC	SHC	PI	TC	SHC	PI	TC	SHC	PI
75	47.7	12.5	4.73	37.3	36.0	4.76	41.3	27.3	4.91	44.4	12.0	5.00	32.9	32.6	4.97	36.3	24.7	5.13	39.1	10.9	5.23
80	47.7	23.3	4.74	39.0	39.0	4.77	42.0	34.1	4.92	44.4	22.4	5.01	34.3	34.3	4.99	37.0	31.0	5.15	39.1	20.3	5.24
85	47.6	32.2	4.76	40.4	40.4	4.79	42.6	41.1	4.94	44.3	30.9	5.03	35.6	35.6	5.00	37.5	37.3	5.16	39.0	28.0	5.26
90	47.3	39.3	4.77	41.7	41.7	4.80	43.1	43.1	4.95	44.0	37.6	5.04	36.8	36.8	5.02	37.9	37.9	5.18	38.7	34.1	5.27

Model No.: LV-D4881HL

Outdoor DB (°F)	85									95									105					
Indoor WB (°F)	61			67			73			61			67			73			61			67		
Indoor DB (°F)	TC	SHC	PI	TC	SHC	PI	TC	SHC	PI	TC	SHC	PI	TC	SHC	PI	TC	SHC	PI	TC	SHC	PI	TC	SHC	PI
75	44.9	39.3	4.02	49.6	29.8	4.15	53.3	13.1	4.23	42.7	39.5	4.45	47.2	29.9	4.59	"50.7	13.2	4.67	40.2	37.5	4.76	44.4	28.4	4.91
80	46.8	45.2	4.03	50.5	37.3	4.16	53.4	24.4	4.24	44.5	44.5	4.46	48.0	37.4	4.60	50.7	24.5	4.69	41.9	41.9	4.77	45.2	35.6	4.92
85	48.6	48.6	4.05	51.2	44.9	4.17	53.2	33.8	4.25	46.2	46.2	4.47	48.7	45.1	4.61	50.6	33.9	4.70	43.5	43.5	4.79	45.8	42.9	4.94
90	50.2	50.2	4.06	51.8	49.9	4.19	52.9	41.1	4.26	47.7	47.7	4.49	49.2	49.2	4.63	50.3	41.3	4.71	44.9	44.9	4.80	46.3	46.3	4.95

Outdoor DB (°F)	105			115									125								
Indoor WB (°F)	73			61			67			73			61			67			73		
Indoor DB (°F)	TC	SHC	PI	TC	SHC	PI	TC	SHC	PI	TC	SHC	PI	TC	SHC	PI	TC	SHC	PI	TC	SHC	PI
75	47.7	12.5	5.00	37.3	36.0	5.03	41.3	27.3	5.19	44.4	12.0	5.29	32.9	32.6	5.26	36.3	24.7	5.43	39.1	10.9	5.53
80	47.7	23.3	5.02	39.0	39.0	5.05	42.0	34.1	5.21	44.4	22.4	5.30	34.3	34.3	5.28	37.0	31.0	5.44	39.1	20.3	5.54
85	47.6	32.2	5.03	40.4	40.4	5.06	42.6	41.1	5.22	44.3	30.9	5.32	35.6	35.6	5.29	37.5	37.3	5.46	39.0	28.0	5.56
90	47.3	39.3	5.05	41.7	41.7	5.08	43.1	43.1	5.24	44.0	37.6	5.33	36.8	36.8	5.31	37.9	37.9	5.48	38.7	34.1	5.58

Notes: 1. All capacites are net, evaporator fan motor heat is deducted.
2. DB=Dry Bulb Temperature(°F), WB=Wet Bulb Temperature(°F)
3. TC=Total cooling capacity(Unit:kBtu/h)
4. SHC=Sensible heat capacity(Unit:kBtu/h)
5. PI=Power Input(Comp.+ indoor fan motor+outdoor fan motor) (kW)

Model No.: LV-D6081CL

Outdoor DB (°F)	85									95									105					
Indoor WB (°F)	61			67			73			61			67			73			61			67		
Indoor DB (°F)	TC	SHC	PI	TC	SHC	PI	TC	SHC	PI	TC	SHC	PI	TC	SHC	PI	TC	SHC	PI	TC	SHC	PI	TC	SHC	PI
75	56.1	49.8	4.58	62.0	37.7	4.73	66.7	16.6	4.81	53.3	50.0	5.06	58.9	37.9	5.22	63.4	16.7	5.32	50.2	47.5	5.42	55.5	36.0	5.59
80	58.5	57.2	4.60	63.1	47.2	4.74	66.7	30.9	4.83	55.6	55.6	5.08	60.0	47.4	5.24	63.4	31.0	5.34	52.4	52.4	5.44	56.5	45.1	5.61
85	60.7	60.7	4.61	64.0	56.9	4.75	66.5	42.8	4.84	57.7	57.7	5.09	60.9	57.1	5.26	63.2	42.9	5.35	54.3	54.3	5.45	57.3	54.3	5.63
90	62.7	62.7	4.62	64.7	63.2	4.77	66.1	52.1	4.86	59.6	59.6	5.11	61.5	61.5	5.27	62.8	52.3	5.37	56.1	56.1	5.47	57.9	57.9	5.64

Outdoor DB (°F)	105			115									125								
Indoor WB (°F)	73			61			67			73			61			67			73		
Indoor DB (°F)	TC	SHC	PI	TC	SHC	PI	TC	SHC	PI	TC	SHC	PI	TC	SHC	PI	TC	SHC	PI	TC	SHC	PI
75	59.7	15.9	5.70	46.7	45.6	5.73	51.6	34.5	5.91	55.5	15.2	6.02	41.1	41.1	5.99	45.4	31.3	6.18	48.8	13.8	6.30
80	59.7	29.5	5.71	48.7	48.7	5.75	52.5	43.2	5.93	55.5	28.3	6.04	42.9	42.9	6.01	46.2	39.2	6.20	48.9	25.7	6.31
85	59.5	40.8	5.73	50.5	50.5	5.77	53.3	52.0	5.95	55.3	39.1	6.06	44.5	44.5	6.03	46.9	46.9	6.22	48.7	35.5	6.33
90	59.2	49.7	5.75	52.2	52.2	5.78	53.9	53.9	5.97	55.0	47.7	6.08	45.9	45.9	6.05	47.4	47.4	6.24	48.4	43.2	6.35

Model No.: LV-D6081HL

Outdoor DB (°F)	85									95									105					
Indoor WB (°F)	61			67			73			61			67			73			61			67		
Indoor DB (°F)	TC	SHC	PI	TC	SHC	PI	TC	SHC	PI	TC	SHC	PI	TC	SHC	PI	TC	SHC	PI	TC	SHC	PI	TC	SHC	PI
75	56.1	49.8	4.28	62.0	37.7	4.42	66.7	16.6	4.50	53.3	50.0	4.74	58.9	37.9	4.89	63.4	16.7	4.98	50.2	47.5	5.07	55.5	36.0	5.23
80	58.5	57.2	4.30	63.1	47.2	4.43	66.7	30.9	4.51	55.6	55.6	4.75	60.0	47.4	4.90	63.4	31.0	4.99	52.4	52.4	5.08	56.5	45.1	5.25
85	60.7	60.7	4.31	64.0	56.9	4.45	66.5	42.8	4.53	57.7	57.7	4.76	60.9	57.1	4.91	63.2	42.9	5.01	54.3	54.3	5.10	57.3	54.3	5.26
90	62.7	62.7	4.32	64.7	63.2	4.46	66.1	52.1	4.54	59.6	59.6	4.78	61.5	61.5	4.93	62.8	52.3	5.02	56.1	56.1	5.12	57.9	57.9	5.28

Outdoor DB (°F)	105			115									125								
Indoor WB (°F)	73			61			67			73			61			67			73		
Indoor DB (°F)	TC	SHC	PI	TC	SHC	PI	TC	SHC	PI	TC	SHC	PI	TC	SHC	PI	TC	SHC	PI	TC	SHC	PI
75	59.7	15.9	5.33	46.7	45.6	5.36	51.6	34.5	5.53	55.5	15.2	5.63	41.1	41.1	5.60	45.4	31.3	5.78	48.8	13.8	5.89
80	59.7	29.5	5.34	48.7	48.7	5.38	52.5	43.2	5.55	55.5	28.3	5.65	42.9	42.9	5.62	46.2	39.2	5.80	48.9	25.7	5.91
85	59.5	40.8	5.36	50.5	50.5	5.39	53.3	52.0	5.56	55.3	39.1	5.67	44.5	44.5	5.64	46.9	46.9	5.82	48.7	35.5	5.92
90	59.2	49.7	5.37	52.2	52.2	5.41	53.9	53.9	5.58	55.0	47.7	5.68	45.9	45.9	5.65	47.4	47.4	5.83	48.4	43.2	5.94

Model No.: LV-C368KLA1

Outdoor DB (°F)	85									95									105					
Indoor WB (°F)	61			67			73			61			67			73			61			67		
Indoor DB (°F)	TC	SHC	PI	TC	SHC	PI	TC	SHC	PI	TC	SHC	PI	TC	SHC	PI	TC	SHC	PI	TC	SHC	PI	TC	SHC	PI
75	31.3	26.4	2.80	34.6	20.0	2.89	37.2	8.8	2.94	30.2	26.9	3.09	33.4	20.4	3.19	35.9	9.0	3.25	29.2	26.2	3.31	32.2	19.8	3.42
80	32.7	30.3	2.81	35.2	25.0	2.89	37.2	16.4	2.95	31.5	30.9	3.10	34.0	25.5	3.20	35.9	16.7	3.26	30.4	30.1	3.32	32.8	24.9	3.43
85	33.9	33.2	2.81	35.8	30.1	2.90	37.1	22.7	2.96	32.7	32.7	3.11	34.5	30.7	3.21	35.8	23.1	3.27	31.6	31.6	3.33	33.3	29.9	3.44
90	35.0	35.0	2.82	36.1	33.5	2.91	36.9	27.6	2.97	33.8	33.8	3.12	34.9	34.1	3.22	35.6	28.1	3.28	32.6	32.6	3.34	33.6	33.3	3.45

Outdoor DB (°F)	105			115									125								
Indoor WB (°F)	73			61			67			73			61			67			73		
Indoor DB (°F)	TC	SHC	PI	TC	SHC	PI	TC	SHC	PI	TC	SHC	PI	TC	SHC	PI	TC	SHC	PI	TC	SHC	PI
75	34.7	8.8	3.48	27.5	25.5	3.50	30.4	19.3	3.61	32.7	8.5	3.68	25.5	24.3	3.66	28.2	18.4	3.77	30.3	8.1	3.84
80	34.7	16.3	3.49	28.7	28.7	3.51	31.0	24.2	3.62	32.7	15.8	3.69	26.6	26.6	3.67	28.7	23.1	3.79	30.3	15.1	3.86
85	34.6	22.5	3.50	29.8	29.8	3.52	31.4	29.1	3.63	32.6	21.9	3.70	27.6	27.6	3.68	29.1	27.8	3.80	30.2	20.9	3.87
90	34.4	27.4	3.51	30.8	30.8	3.53	31.7	31.7	3.64	32.4	26.7	3.71	28.5	28.5	3.69	29.4	29.4	3.81	30.0	25.5	3.88

Notes: 1. All capacites are net, evaporator fan motor heat is deducted.
2. DB=Dry Bulb Temperature(°F), WB=Wet Bulb Temperature(°F)
3. TC=Total cooling capacity(Unit:kBtu/h)
4. SHC=Sensible heat capacity(Unit:kBtu/h)
5. PI=Power Input(Comp.+ indoor fan motor+outdoor fan motor) (kW)

10. Performance Data

Model No.: LV-C(H)368KLA(B)0

Outdoor DB (°F)	85									95									105					
Indoor WB (°F)	61			67			73			61			67			73			61			67		
Indoor DB (°F)	TC	SHC	PI	TC	SHC	PI	TC	SHC	PI	TC	SHC	PI	TC	SHC	PI	TC	SHC	PI	TC	SHC	PI	TC	SHC	PI
75	33.2	27.9	3.03	36.7	21.2	3.13	39.4	9.3	3.19	32.0	28.5	3.35	35.4	21.6	3.46	38.0	9.5	3.52	30.9	27.7	3.59	34.1	21.0	3.70
80	34.6	32.1	3.04	37.3	26.5	3.14	39.4	17.4	3.20	33.4	32.7	3.36	36.0	27.0	3.47	38.0	17.7	3.53	32.2	31.9	3.60	34.7	26.3	3.71
85	35.9	35.2	3.05	37.9	31.9	3.15	39.3	24.0	3.21	34.6	34.6	3.37	36.5	32.5	3.48	37.9	24.5	3.54	33.4	33.4	3.61	35.2	31.7	3.73
90	37.1	37.0	3.06	38.3	35.4	3.16	39.1	29.2	3.22	35.8	35.8	3.38	36.9	36.1	3.49	37.7	29.8	3.56	34.5	34.5	3.62	35.6	35.2	3.74

Outdoor DB (°F)	105			115									125								
Indoor WB (°F)	73			61			67			73			61			67			73		
Indoor DB (°F)	TC	SHC	PI	TC	SHC	PI	TC	SHC	PI	TC	SHC	PI	TC	SHC	PI	TC	SHC	PI	TC	SHC	PI
75	36.7	9.3	3.77	29.1	27.0	3.80	32.2	20.4	3.92	34.6	9.0	3.99	27.0	25.8	3.97	29.8	19.5	4.09	32.1	8.6	4.17
80	36.7	17.2	3.78	30.4	30.4	3.81	32.8	25.6	3.93	34.6	16.8	4.00	28.2	28.2	3.98	30.4	24.4	4.11	32.1	16.0	4.18
85	36.6	23.8	3.79	31.5	31.5	3.82	33.3	30.8	3.94	34.5	23.2	4.01	29.2	29.2	3.99	30.8	29.4	4.12	32.0	22.1	4.19
90	36.4	29.0	3.81	32.6	32.6	3.83	33.6	33.6	3.95	34.3	28.2	4.02	30.2	30.2	4.00	31.1	31.1	4.13	31.8	27.0	4.21

Model No.: LV-C(H)488LLA(B)0, LV-C488LLA1

Outdoor DB (°F)	85									95									105					
Indoor WB (°F)	61			67			73			61			67			73			61			67		
Indoor DB (°F)	TC	SHC	PI	TC	SHC	PI	TC	SHC	PI	TC	SHC	PI	TC	SHC	PI	TC	SHC	PI	TC	SHC	PI	TC	SHC	PI
75	43.3	34.0	4.19	47.9	25.8	4.32	51.5	11.4	4.40	41.8	34.7	4.63	46.2	26.3	4.78	49.6	11.6	4.86	40.3	33.8	4.96	44.6	25.6	5.11
80	45.2	39.1	4.20	48.7	32.3	4.33	51.5	21.1	4.41	43.6	39.8	4.64	47.0	32.9	4.79	49.7	21.5	4.88	42.0	38.8	4.97	45.4	32.1	5.13
85	46.9	42.8	4.21	49.4	38.9	4.35	51.3	29.2	4.43	45.2	43.7	4.66	47.7	39.6	4.80	49.5	29.8	4.89	43.6	42.5	4.99	46.0	38.6	5.14
90	48.4	45.1	4.23	50.0	43.2	4.36	51.0	35.6	4.44	46.7	46.0	4.67	48.2	44.0	4.82	49.2	36.3	4.91	45.1	44.8	5.00	46.5	42.9	5.16

Outdoor DB (°F)	105			115									125								
Indoor WB (°F)	73			61			67			73			61			67			73		
Indoor DB (°F)	TC	SHC	PI	TC	SHC	PI	TC	SHC	PI	TC	SHC	PI	TC	SHC	PI	TC	SHC	PI	TC	SHC	PI
75	47.9	11.3	5.21	38.0	32.9	5.24	42.0	24.9	5.40	45.2	11.0	5.50	35.2	31.4	5.48	38.9	23.8	5.65	41.9	10.5	5.76
80	47.9	21.0	5.22	39.7	37.8	5.26	42.8	31.2	5.42	45.2	20.4	5.52	36.8	36.1	5.49	39.6	29.8	5.67	41.9	19.5	5.77
85	47.8	29.0	5.24	41.2	41.2	5.27	43.4	37.6	5.44	45.1	28.3	5.54	38.1	38.1	5.51	40.2	35.9	5.68	41.8	27.0	5.79
90	47.5	35.4	5.25	42.5	42.5	5.29	43.9	41.8	5.45	44.8	34.4	5.55	39.4	39.4	5.53	40.7	39.8	5.70	41.5	32.8	5.81

Model No.: LV-C(H)608LLA(B)0, LV-C608LLA1

Outdoor DB (°F)	85									95									105					
Indoor WB (°F)	61			67			73			61			67			73			61			67		
Indoor DB (°F)	TC	SHC	PI	TC	SHC	PI	TC	SHC	PI	TC	SHC	PI	TC	SHC	PI	TC	SHC	PI	TC	SHC	PI	TC	SHC	PI
75	47.9	37.7	4.96	53.0	28.5	5.11	56.9	12.6	5.21	46.2	38.4	5.48	51.1	29.1	5.65	54.9	12.8	5.76	44.6	37.4	5.87	49.3	28.3	6.05
80	50.0	43.3	4.97	53.9	35.7	5.13	57.0	23.4	5.22	48.2	44.1	5.50	52.0	36.4	5.67	54.9	23.8	5.78	46.5	43.0	5.88	50.2	35.5	6.07
85	51.9	47.4	4.99	54.7	43.0	5.14	56.8	32.4	5.24	50.0	48.3	5.51	52.8	43.8	5.69	54.8	33.0	5.79	48.3	47.1	5.90	50.9	42.7	6.09
90	53.6	49.9	5.00	55.3	47.8	5.16	56.4	39.4	5.26	51.7	50.9	5.53	53.3	48.7	5.70	54.5	40.2	5.81	49.9	49.6	5.92	51.5	47.5	6.11

Outdoor DB (°F)	105			115									125								
Indoor WB (°F)	73			61			67			73			61			67			73		
Indoor DB (°F)	TC	SHC	PI	TC	SHC	PI	TC	SHC	PI	TC	SHC	PI	TC	SHC	PI	TC	SHC	PI	TC	SHC	PI
75	53.0	12.5	6.16	42.1	36.4	6.20	46.5	27.6	6.40	50.0	12.2	6.52	39.0	34.7	6.48	43.1	26.3	6.69	46.3	11.6	6.81
80	53.0	23.2	6.18	43.9	41.8	6.22	47.4	34.5	6.42	50.0	22.6	6.54	40.7	39.9	6.50	43.9	32.9	6.71	46.3	21.6	6.83
85	52.9	32.1	6.20	45.6	45.6	6.24	48.0	41.6	6.44	49.9	31.3	6.56	42.2	42.2	6.52	44.5	39.7	6.73	46.2	29.8	6.85
90	52.6	39.1	6.22	47.1	47.1	6.26	48.6	46.2	6.46	49.6	38.1	6.58	43.6	43.6	6.54	45.0	44.1	6.75	45.9	36.3	6.87

Notes: 1. All capacites are net, evaporator fan motor heat is deducted.
2. DB=Dry Bulb Temperature(°F), WB=Wet Bulb Temperature(°F)
3. TC=Total cooling capacity(Unit:kBtu/h)
4. SHC=Sensible heat capacity(Unit:kBtu/h)
5. PI=Power Input(Comp.+ indoor fan motor+outdoor fan motor) (kW)

10.2 Heating Capacity

Model No.: LV-B1864H(B)L

Indoor DB(°F)	Outdoor WB (°F)															
	14.0		23.0		32.0		35.6		39.2		42.8		50.0		59.0	
	TC	PI	TC	PI	TC	PI	TC	PI	TC	PI	TC	PI	TC	PI	TC	PI
60.8	13.5	1.3	15.9	1.5	18.4	1.6	19.3	1.7	20.3	1.7	21.4	1.7	23.2	1.8	25.6	2.0
64.4	13.1	1.4	15.4	1.5	17.8	1.7	18.7	1.7	19.6	1.8	20.7	1.8	22.4	1.9	24.8	2.0
68.0	12.7	1.4	15.0	1.6	17.3	1.7	18.2	1.8	19.0	1.8	20.0	1.9	21.8	1.9	24.0	2.1
71.6	12.2	1.5	14.4	1.6	16.7	1.8	17.5	1.8	18.4	1.9	19.4	1.9	21.0	2.0	23.2	2.2
75.2	11.8	1.5	13.9	1.7	16.1	1.8	16.9	1.9	17.7	1.9	18.7	2.0	20.3	2.1	22.4	2.2

Model No.: LV-B2464H(B)L

Indoor DB(°F)	Outdoor WB (°F)															
	14.0		23.0		32.0		35.6		39.2		42.8		50.0		59.0	
	TC	PI	TC	PI	TC	PI	TC	PI	TC	PI	TC	PI	TC	PI	TC	PI
60.8	16.2	1.9	19.1	2.0	22.1	2.2	23.2	2.3	24.3	2.4	25.7	2.4	27.8	2.5	30.7	2.7
64.4	15.7	1.9	18.5	2.1	21.4	2.3	22.5	2.4	23.5	2.4	24.9	2.5	26.9	2.6	29.7	2.8
68.0	15.2	2.0	17.9	2.2	20.8	2.4	21.8	2.5	22.8	2.5	24.0	2.6	26.1	2.7	28.8	2.9
71.6	14.7	2.1	17.3	2.3	20.0	2.5	21.0	2.5	22.0	2.6	23.3	2.7	25.2	2.8	27.8	3.0
75.2	14.2	2.1	16.7	2.3	19.3	2.5	20.3	2.6	21.3	2.7	22.5	2.7	24.3	2.9	26.8	3.1

Model No.: LV-B2860HL

Indoor DB(°F)	Outdoor WB (°F)															
	14.0		23.0		32.0		35.6		39.2		42.8		50.0		59.0	
	TC	PI	TC	PI	TC	PI	TC	PI	TC	PI	TC	PI	TC	PI	TC	PI
60.8	18.9	2.1	22.3	2.3	25.8	2.5	27.1	2.5	28.4	2.6	30.0	2.7	32.5	2.8	35.8	3.0
64.4	18.3	2.1	21.6	2.3	25.0	2.6	26.2	2.6	27.5	2.7	29.0	2.8	31.4	2.9	34.7	3.1
68.0	17.8	2.2	20.9	2.4	24.2	2.6	25.4	2.7	26.7	2.8	28.0	2.9	30.5	3.0	33.7	3.2
71.6	17.1	2.3	20.2	2.5	23.3	2.7	24.5	2.8	25.7	2.9	27.1	2.9	29.4	3.1	32.4	3.3
75.2	16.5	2.4	19.5	2.6	22.5	2.8	23.7	2.9	24.8	3.0	26.2	3.0	28.4	3.2	31.3	3.4

Model No.: LV-C3681HL

Indoor DB(°F)	Outdoor WB (°F)															
	14.0		23.0		32.0		35.6		39.2		42.8		50.0		59.0	
	TC	PI	TC	PI	TC	PI	TC	PI	TC	PI	TC	PI	TC	PI	TC	PI
60.8	24.3	2.1	28.7	2.3	33.1	2.5	34.8	2.6	36.5	2.7	38.5	2.7	41.7	2.9	46.1	3.1
64.4	23.6	2.2	27.7	2.4	32.1	2.6	33.7	2.7	35.3	2.8	37.3	2.8	40.4	3.0	44.6	3.2
68.0	22.8	2.3	26.9	2.5	31.1	2.7	32.7	2.8	34.3	2.9	36.0	2.9	39.2	3.1	43.3	3.3
71.6	22.0	2.3	25.9	2.5	30.0	2.8	31.5	2.9	33.0	2.9	34.9	3.0	37.8	3.2	41.7	3.4
75.2	21.3	2.4	25.1	2.6	29.0	2.9	30.4	2.9	31.9	3.0	33.7	3.1	36.5	3.2	40.3	3.5

Notes : 1. All capacities are net, indoor fan motor heat is deducted.
2. Capacities are based on the following conditions.
Outdoor air : 85%RH. However, the condition on nominal capacity is 44.6°FDB/42.8°FWB.
3. TC=Total heating capacity(Unit:kBtu/h)
4. PI=Power Input(Comp.+indoor fan motor+outdoor fan motor) (kW)

10. Performance Data

Model No.: LV-H368KLA(B)0

Indoor DB(°F)	Outdoor WB (°F)															
	14.0		23.0		32.0		35.6		39.2		42.8		50.0		59.0	
	TC	PI	TC	PI	TC	PI	TC	PI	TC	PI	TC	PI	TC	PI	TC	PI
60.8	25.0	2.4	29.4	2.7	34.1	2.9	35.8	3.0	37.5	3.1	39.6	3.1	42.9	3.3	47.3	3.5
64.4	24.2	2.5	28.5	2.8	33.0	3.0	34.6	3.1	36.3	3.2	38.4	3.2	41.5	3.4	45.8	3.7
68.0	23.5	2.6	27.7	2.9	32.0	3.1	33.6	3.2	35.2	3.3	37.0	3.4	40.3	3.5	44.5	3.8
71.6	22.6	2.7	26.7	2.9	30.9	3.2	32.4	3.3	34.0	3.4	35.9	3.5	38.8	3.6	42.9	3.9
75.2	21.9	2.8	25.8	3.0	29.8	3.3	31.3	3.4	32.8	3.5	34.6	3.6	37.5	3.8	41.4	4.0

Model No.: LV-H488LLA(B)0

Indoor DB(°F)	Outdoor WB (°F)															
	14.0		23.0		32.0		35.6		39.2		42.8		50.0		59.0	
	TC	PI	TC	PI	TC	PI	TC	PI	TC	PI	TC	PI	TC	PI	TC	PI
60.8	34.9	3.2	41.1	3.5	47.6	3.8	50.0	3.9	52.4	4.0	55.4	4.1	59.9	4.3	66.1	4.6
64.4	33.8	3.3	39.8	3.6	46.1	3.9	48.4	4.0	50.7	4.2	53.6	4.2	58.0	4.5	64.0	4.8
68.0	32.8	3.4	38.7	3.7	44.7	4.1	47.0	4.2	49.2	4.3	51.7	4.4	56.3	4.6	62.1	4.9
71.6	31.6	3.5	37.3	3.8	43.1	4.2	45.3	4.3	47.4	4.4	50.1	4.5	54.3	4.8	59.9	5.1
75.2	30.5	3.6	36.0	4.0	41.6	4.3	43.7	4.4	45.8	4.6	48.4	4.7	52.4	4.9	57.8	5.2

Model No.: LV-H608LLA(B)0

Indoor DB(°F)	Outdoor WB (°F)															
	14.0		23.0		32.0		35.6		39.2		42.8		50.0		59.0	
	TC	PI	TC	PI	TC	PI	TC	PI	TC	PI	TC	PI	TC	PI	TC	PI
60.8	38.5	3.8	45.4	4.1	52.5	4.5	55.1	4.6	57.8	4.8	61.0	4.9	66.1	5.1	72.9	5.5
64.4	37.3	3.9	43.9	4.3	50.8	4.6	53.4	4.8	55.9	4.9	59.1	5.0	64.0	5.3	70.6	5.7
68.0	36.2	4.0	42.6	4.4	49.3	4.8	51.8	4.9	54.3	5.1	57.0	5.2	62.1	5.5	68.5	5.8
71.6	34.9	4.2	41.1	4.5	47.5	5.0	49.9	5.1	52.3	5.3	55.3	5.3	59.8	5.6	66.0	6.0
75.2	33.7	4.3	39.7	4.7	45.9	5.1	48.2	5.3	50.5	5.4	53.4	5.5	57.8	5.8	63.8	6.2

Notes : 1. All capacities are net, indoor fan motor heat is deducted.
2. Capacities are based on the following conditions.
Outdoor air : 85%RH. However, the condition on nominal capacity is 44.6°FDB/42.8°FWB.
3. TC=Total heating capacity(Unit:kBtu/h)
4. PI=Power Input(Comp.+indoor fan motor+outdoor fan motor) (kW)

Model No.: LV-D4881HL

Indoor DB(°F)	Outdoor WB (°F)															
	14.0		23.0		32.0		35.6		39.2		42.8		50.0		59.0	
	TC	PI	TC	PI	TC	PI	TC	PI	TC	PI	TC	PI	TC	PI	TC	PI
60.8	32.4	2.6	38.2	2.9	44.2	3.1	46.4	3.2	48.6	3.3	51.4	3.4	55.6	3.6	61.4	3.8
64.4	31.4	2.7	37.0	3.0	42.8	3.2	44.9	3.3	47.1	3.4	49.8	3.5	53.9	3.7	59.5	3.9
68.0	30.5	2.8	35.9	3.1	41.5	3.3	43.6	3.4	45.7	3.5	48.0	3.6	52.3	3.8	57.7	4.1
71.6	29.4	2.9	34.6	3.2	40.0	3.4	42.0	3.5	44.0	3.7	46.5	3.7	50.4	3.9	55.6	4.2
75.2	28.4	3.0	33.4	3.3	38.6	3.5	40.6	3.7	42.5	3.8	44.9	3.8	48.6	4.0	53.7	4.3

Model No.: LV-D6081HL

Indoor DB(°F)	Outdoor WB (°F)															
	14.0		23.0		32.0		35.6		39.2		42.8		50.0		59.0	
	TC	PI	TC	PI	TC	PI	TC	PI	TC	PI	TC	PI	TC	PI	TC	PI
60.8	40.5	3.6	47.8	4.0	55.2	4.3	58.0	4.5	60.8	4.6	64.2	4.7	69.5	4.9	76.8	5.3
64.4	39.3	3.8	46.2	4.1	53.5	4.5	56.2	4.6	58.9	4.8	62.2	4.8	67.3	5.1	74.3	5.5
68.0	38.1	3.9	44.9	4.3	51.9	4.6	54.5	4.8	57.1	4.9	60.0	5.0	65.3	5.3	72.1	5.6
71.6	36.7	4.0	43.2	4.4	50.0	4.8	52.5	4.9	55.1	5.1	58.2	5.2	63.0	5.4	69.5	5.8
75.2	35.4	4.1	41.8	4.5	48.3	4.9	50.7	5.1	53.2	5.2	56.2	5.3	60.8	5.6	67.1	6.0

Notes : 1. All capacities are net, indoor fan motor heat is deducted.
2. Capacities are based on the following conditions.
Outdoor air : 85%RH. However, the condition on nominal capacity is 44.6°FDB/42.8°FWB.
3. TC=Total heating capacity(Unit:kBtu/h)
4. PI=Power Input(Comp.+indoor fan motor+outdoor fan motor) (kW)

Correction Factor for Heating Capacity due to Frost on Heat Exchanger and Defrosting Operation.

The heating capacity in the "Heating Capacity" Table above indicates the actual heating capacity excluding the effect of frost on the heat exchanger and the defrosting operation. Therefore, use the following factor to calculate the average heating capacity including capacity reduction by frost on the exchanger and defrosting operation.

Correction Factor

Outdoor Air Temperature (°FWB, RH=85%)	14	21.2	24.8	28.4	32	35.6	39.2	42.8
Correction Factor	0.95	0.95	0.89	0.87	0.87	0.89	0.91	1.00

11. The Coefficient of Capacity Change

Model No.: LV-B18(24)64C(H/B)L, LV-B2860C(H)L, LV-C3681C(H)L, LV-D4881C(H)L, LV-D6081C(H)L except VK/VL chassis

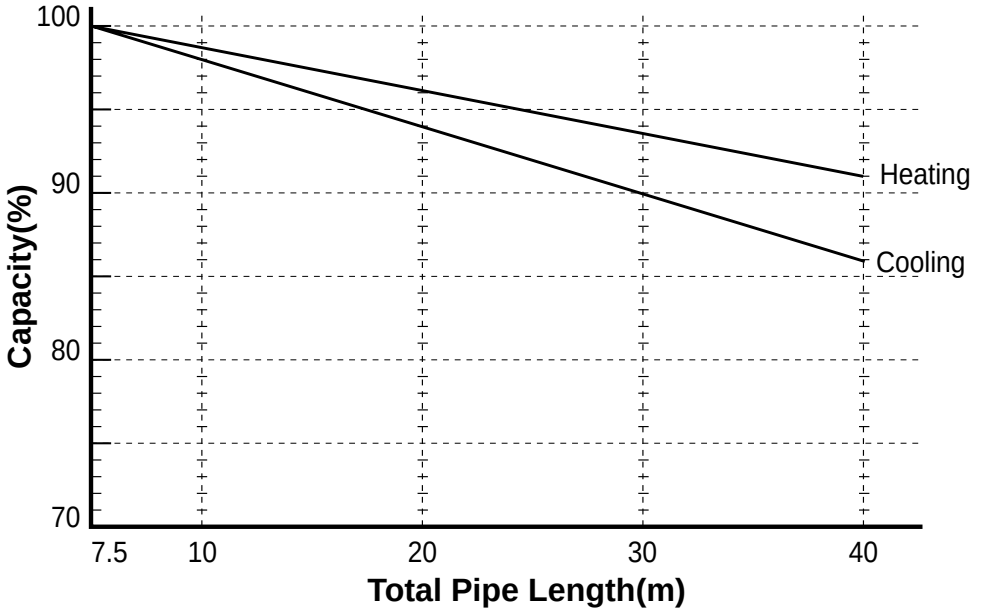

Model	Additional Refrigerant
18k	30g/m
24k	30g/m
28k	30g/m
36k	50g/m
48k	55g/m
60k	60g/m

Notes:

• Refer to the specification for the maximum pipe length of each model.

Model No.: LV-C(H)368KLA(B)0, LV-C(H)48(60)8LLA(B)0

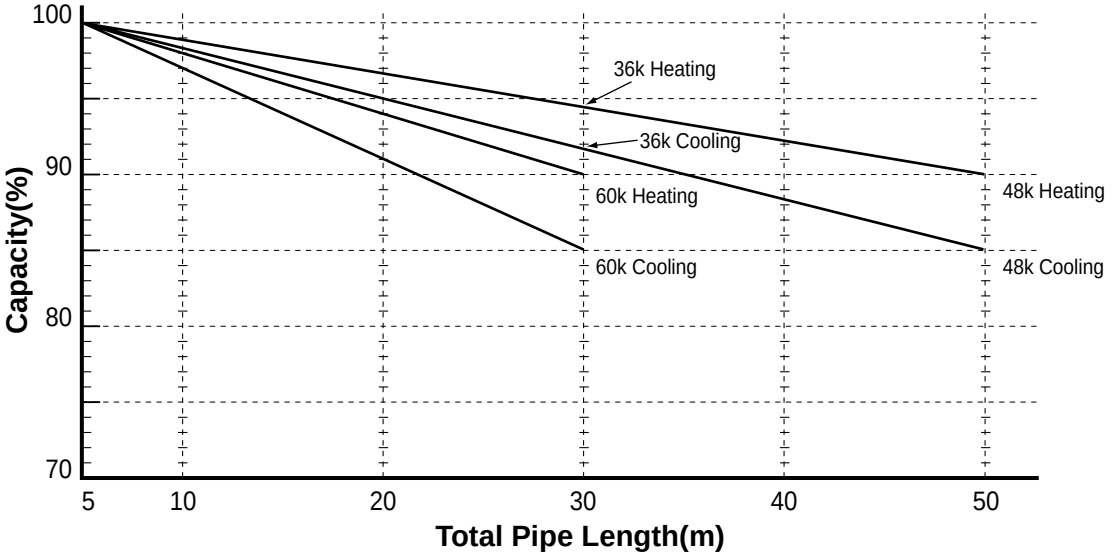

Model	Additional Refrigerant
LV-C488LLA0 LV-C488LLB0 LV-C608LLA0 LV-C608LLB0 LV-H488LLA0 LV-H488LLB0 LV-H608LLA0 LV-H608LLB0	60g/m
LV-C368KLA0 LV-C368KLB0 LV-H368KLA0 LV-H368KLB0	50g/m

Notes:

• Refer to the specification for the maximum pipe length of each model.

11. The Coefficient of Capacity Change

Model No.: LV-C368KLA1, LV-C48(60)8LLA1

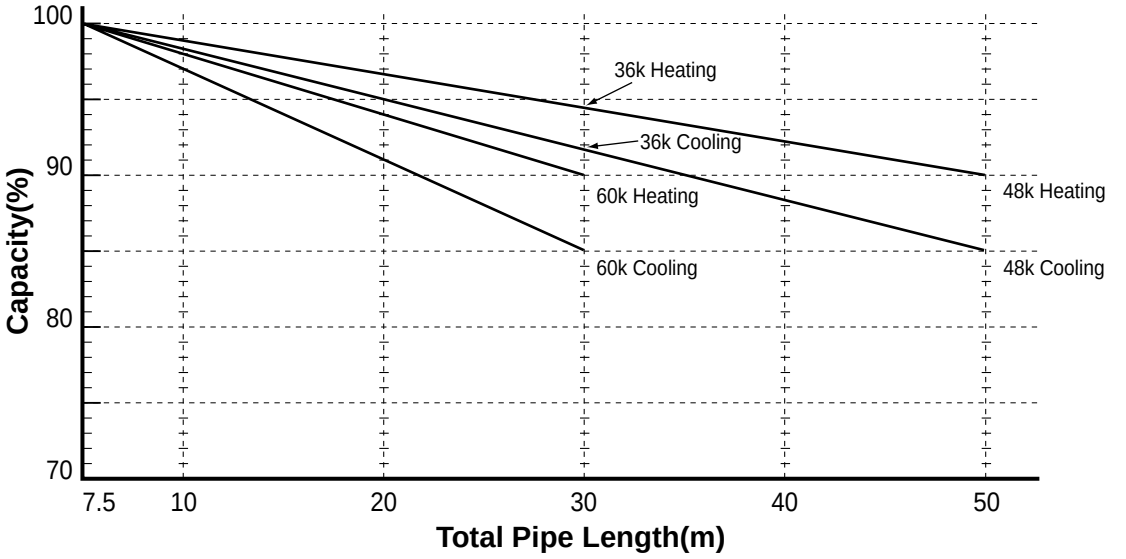

Model	Additional Refrigerant
LV-C368KLA1 LV-C488LLA1 LV-C608LLA1	50g/m

Notes:

• Refer to the specification for the maximum pipe length of each model.

12. Operation Limit

Item	Limit
Inlet air temperature (Cooling) Standard operation Operation with the optional low ambient kit Tropical model * Note:If the ambient temperature goes below 5°C(41°F), the capacity drops down even if the low ambient kit is installed.	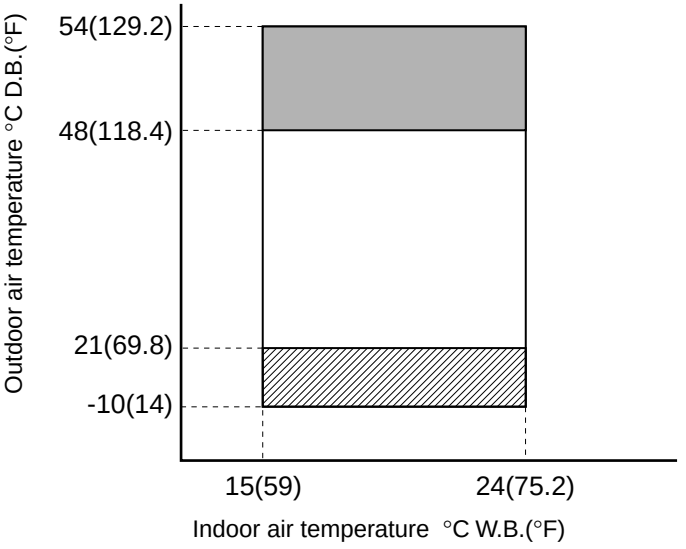
Inlet air temperature (Heating)	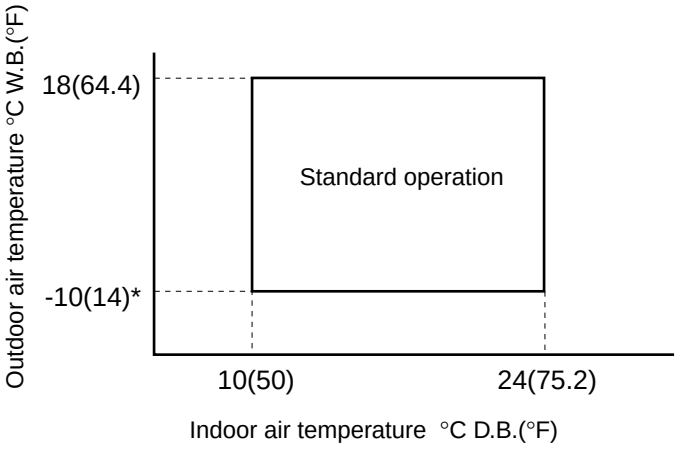 * LV-C3601HL, LV-D4881HL, LV-D6081HL: 1°C(33.8°F)
Power source voltage	Rating ±10%
Voltage at starting	Min. 85% of rating

18kBtu/h Models - Installation on ceiling

Cooling

Discharge angle:45°

Air velocity [m/s]

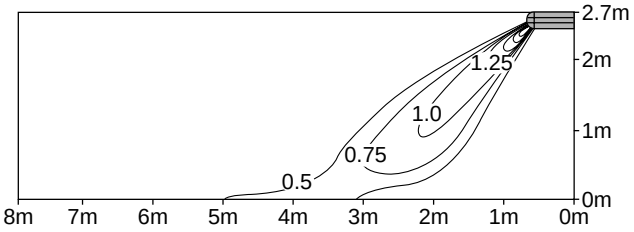

Temperature [˚C]

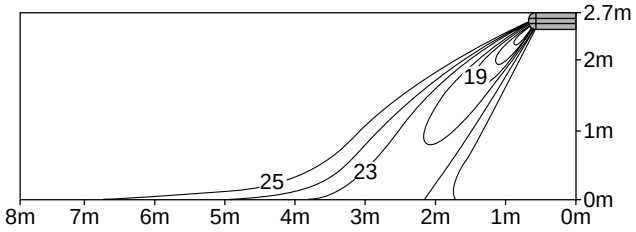

Heating

Discharge angle:45°

Air velocity [m/s]

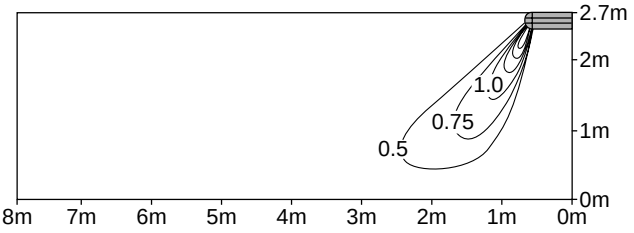

Temperature [˚C]

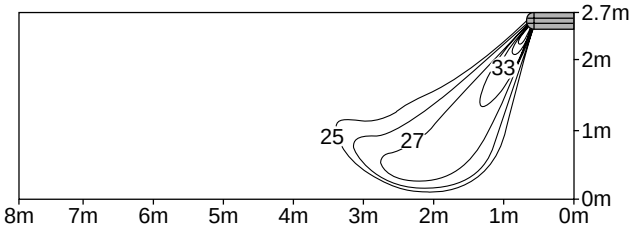

18kBtu/h Models - Installation on the floor or wall

Cooling

Discharge angle:45°

Air velocity [m/s]

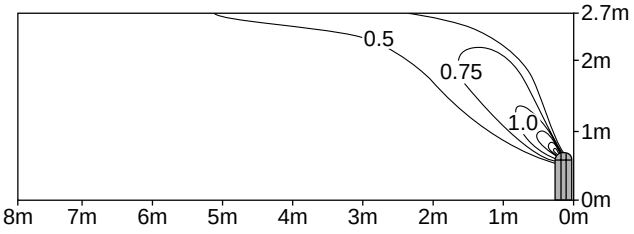

Temperature [˚C]

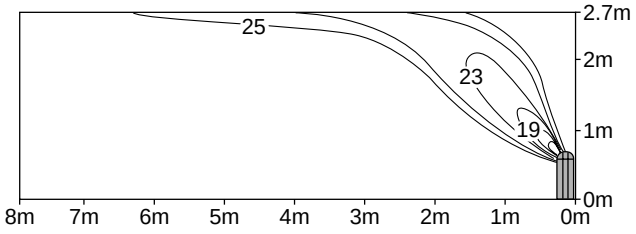

Heating

Discharge angle:45°

Air velocity [m/s]

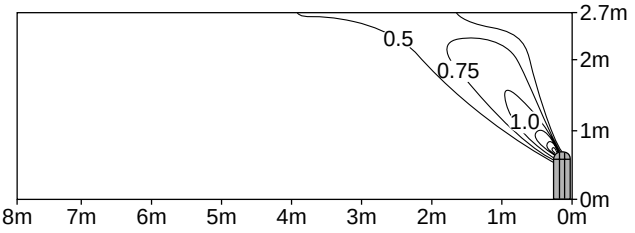

Temperature [˚C]

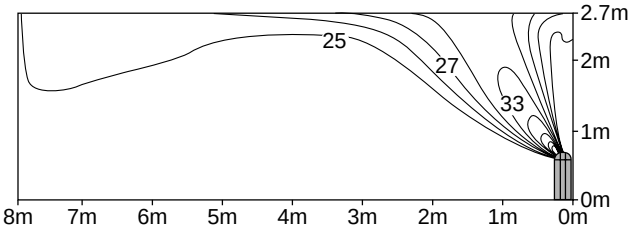

14. Sound Levels

Overall

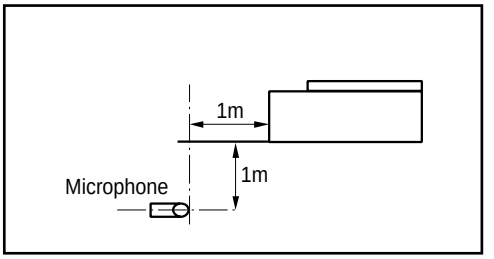

Notes:
- Sound measured at 1m away from the center of the unit.
- Data is valid at free field condition
- Data is valid at nominal operation condition
- Reference accoustic pressure OdB = 20μPa
- Sound level will vary depending on a range of factors such as the construction(acoustic absorption coefficient) of particular room in which the equipment is installed.
- The operating conditions are assumed to be standard.

Model	Sound Levels(dBA)		
	H	M	L
LV-B1864C(H/B)L	43	40	37
LV-B2464C(H/B)L	45	42	39
LV-B2860C(H)L	50	48	46
LV-C(H)368KLA(B)0	43	41	39
LV-C368KLA1			

Model	Sound Levels(dBA)		
	H	M	L
LV-C3681CL	51	48	42
LV-C3681HL	51	48	45
LV-D4881CL	52	47	42
LV-D4881HL	56	52	46
LV-D6081CL	55	50	45
LV-D6081HL	58	55	47
LV-C(H)488LLA(B)0	54	52	50
LV-C488LLA1			
LV-C(H)608LLA(B)0	56	54	52
LV-C608LLA1			

Sound Levels

LV-B1864C(H/B)L

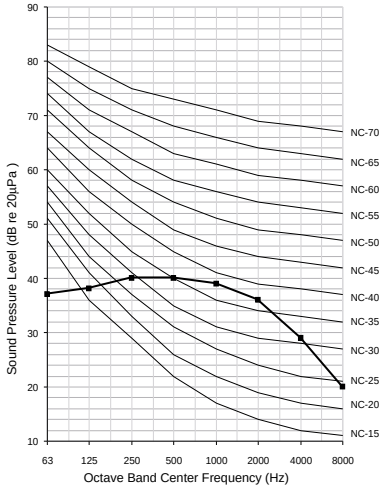

LV-B2464C(H/B)L

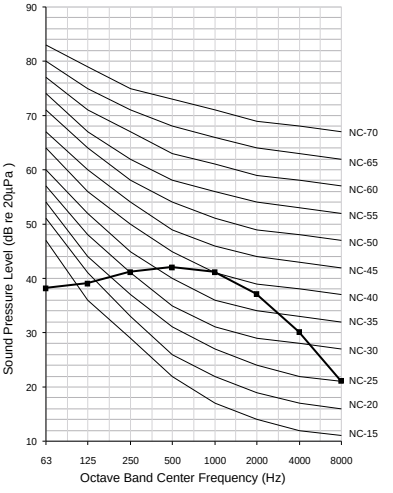

LV-B2860C(H)L

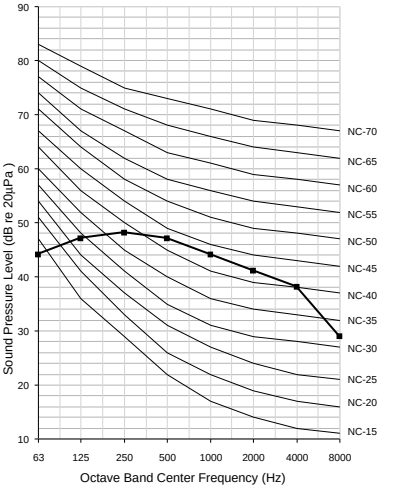

LV-C3681C(H)L

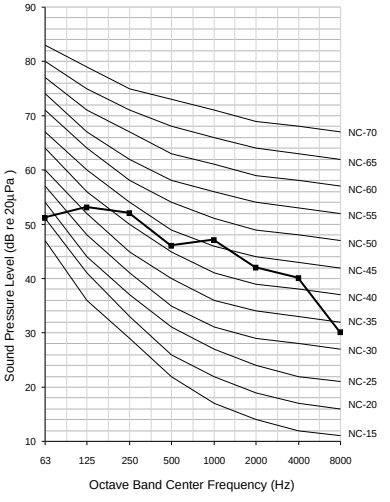

LV-D4881C(H)L

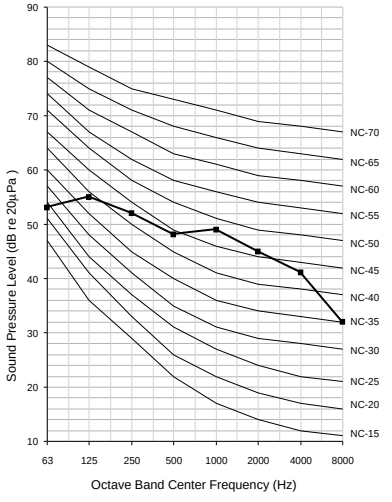

LV-D6081C(H)L

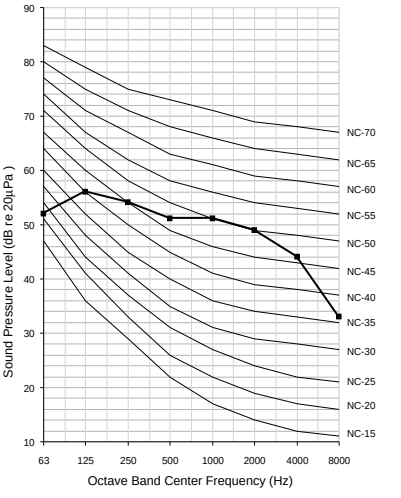

14. Sound Levels

LV-C(H)368KLA(B)0
LV-C368KLA1

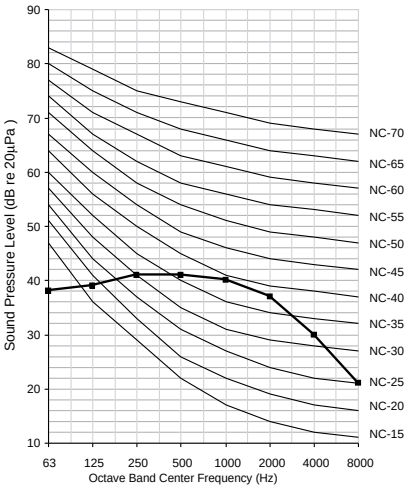

LV-C(H)488LLA(B)0
LV-C488LLA1

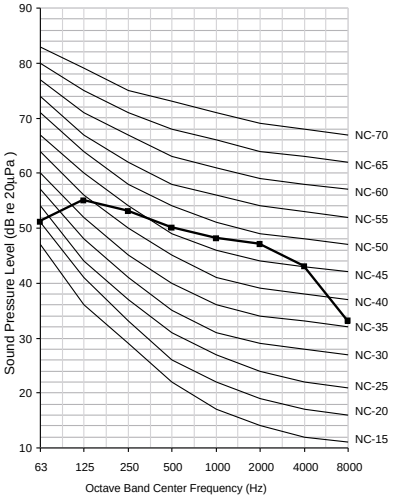

LV-C(H)608LLA(B)0
LV-C608LLA1

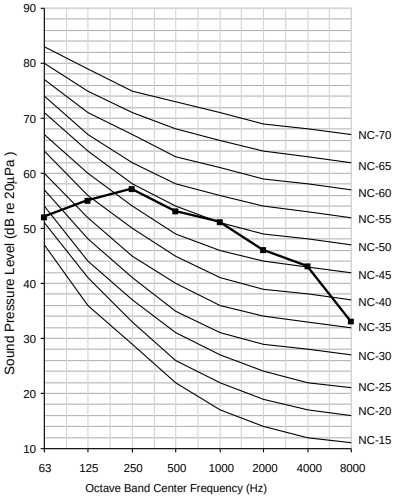

15.1 Selection of best location

1) Indoor Unit

- There should not be any heat source or steam near the unit.
- There should not be any obstacles to the air circulation.
- There should be easy provision of condensate drain.
- Taking into account the noise prevention criteria, spot the installation.
- Keep proper distance of the unit from ceiling, fence, walls & other obstacles as shown figure.
- The indoor unit must have the maintenance space around.

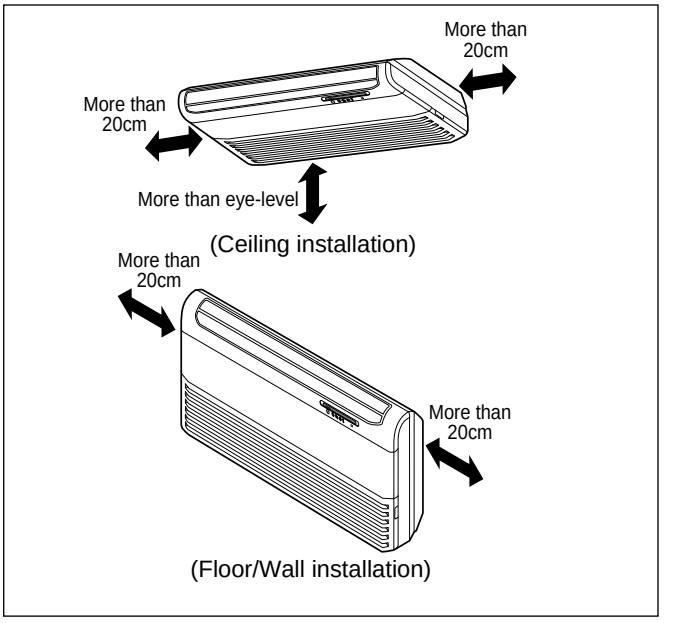

2) Outdoor Unit

- If an roof is built over the unit to prevent direct sunlight or rain exposure, make sure that heat radiation from the condenser is not restricted.
- Do not place animals and plants in the path of the warm air.
- Take the air conditioner weight into account and select a place where noise and vibration are minimum.
- Select a place so that the warm air and noise from the air conditioner do not disturb neighbors.
  Rooftop Installations : If the outdoor unit is installed on a roof structure, be sure to level the unit.
  Ensure the roof structure and anchoring method are adequate for the unit location. Consult local codes regarding rooftop mounting.

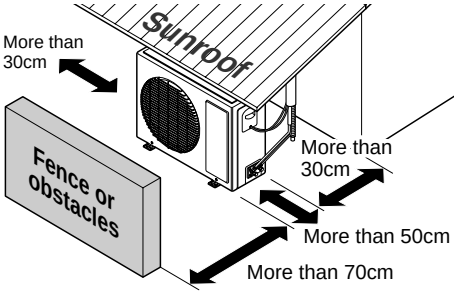

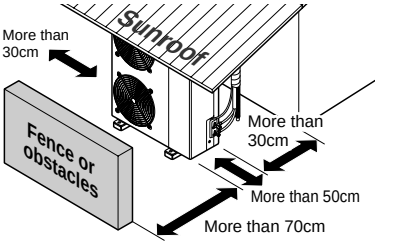

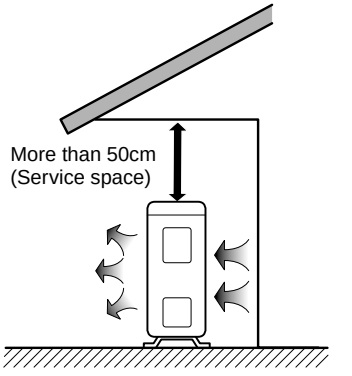

15.2 Settlement of outdoor unit

- Anchor the outdoor unit with a bolt and nut(ø10mm) tightly and horizontally on a concrete or rigid mount.
- When installing on the wall, roof or rooftop, anchor the mounting base securely with a nail or wire assuming the influence of wind and earthquake.
- In the case when the vibration of the unit is conveyed to the hose, secure the unit with an anti-vibration rubber.

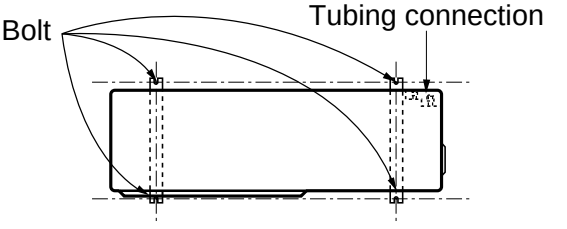

15.3 Indoor unit installation

VB Chassis Models

■ **Before Installing, prepare Installation Plates**

- 'Installation Plates' are attached at the bottom of indoor unit.
  Detach them by removing each 3 screws at both sides.
- Pull the upper right and left side of 'Inlet Grille' to the front, and it will stop at slightly tilted position.
- Unhook the 'Inlet hanger' from the 'Hanger screw' on the both left and right side.
- Detach the 'Inlet Grille' from the Indoor Unit.
- Detach 'Side Plate (R,L)' by removing each 3 screws on both sides.

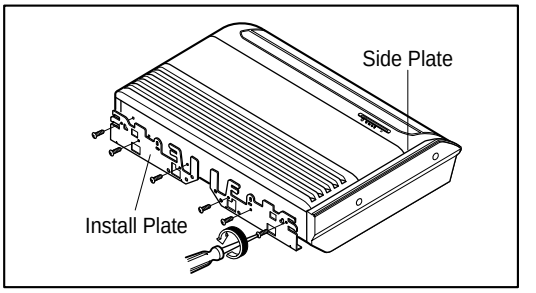

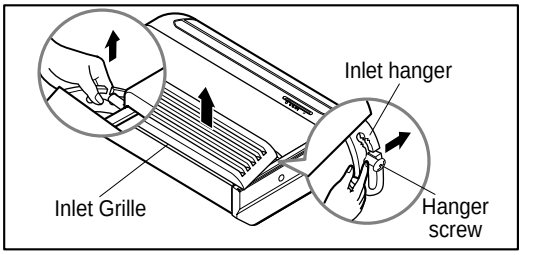

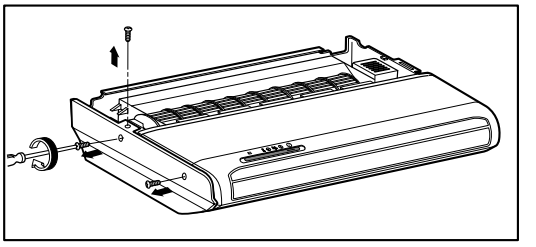

1) Installation on the ceiling

- Measure and mark the position for the Suspension bolts and the piping hole.
- Drill the hole for anchor nut on the ceiling.

※ **Before secure the Installation Plates, select the bent direction of the Installion Plate to the inside or the outside according to the installation circumstances.**

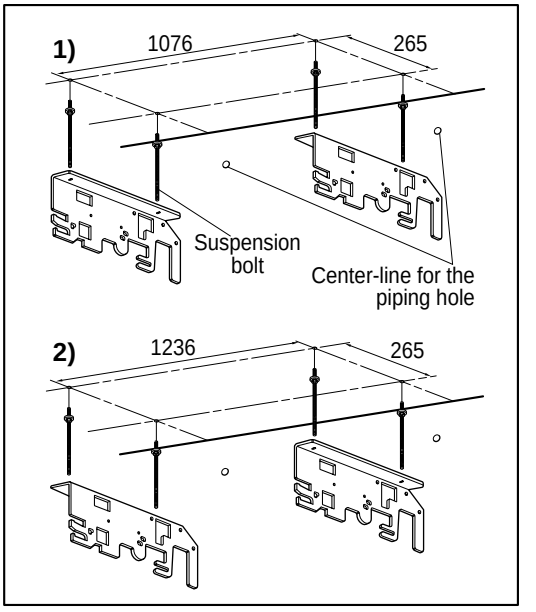

- Drill the piping hole on the wall slightly tilted to the outdoor side using a ø70 hole-core drill.

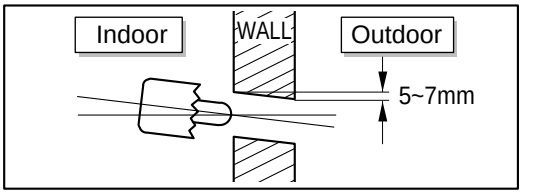

- Insert the nuts and washer onto the suspension bolts for locking the suspension bolts on the ceiling.
- Mount the suspension bolts to the anchor-nuts firmly.
- Secure the Installation plates onto the Suspension bolts (adjust level roughly.) using nuts, washers and spring washers.

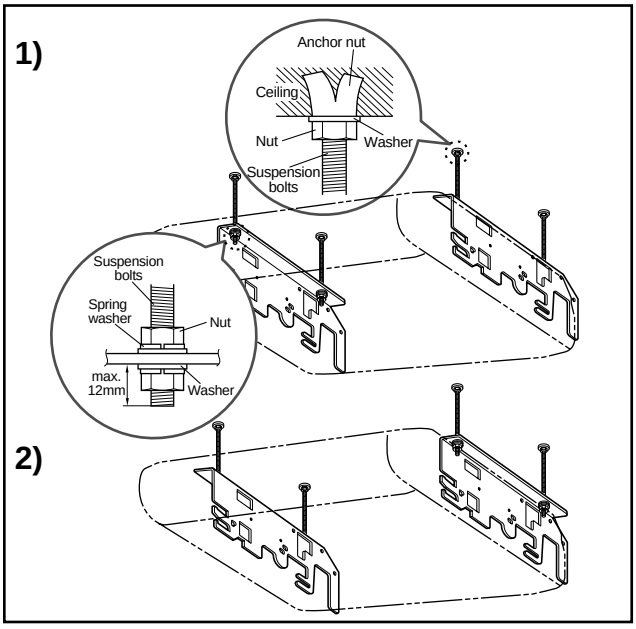

- Engage 2 hooks on the both left and right side of the unit to the lower slot of Installation Plates.
- Adjust a level with a level gauge on the direction of left-right, back-forth by adjusting suspension bolts.
- Move the hooks on the unit to the upper slot of Installation Plates. Then the unit will be declined to the bottomside so as to drain well.

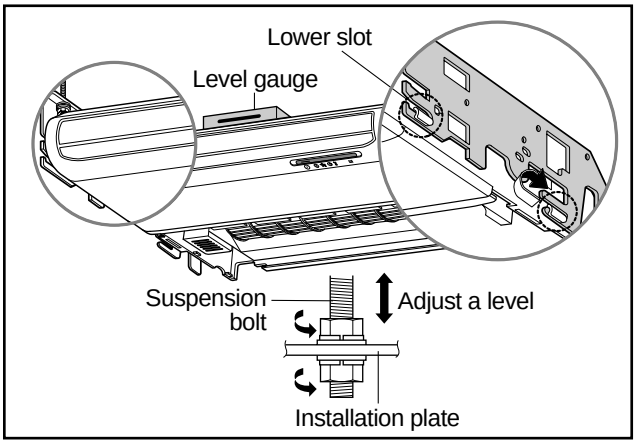

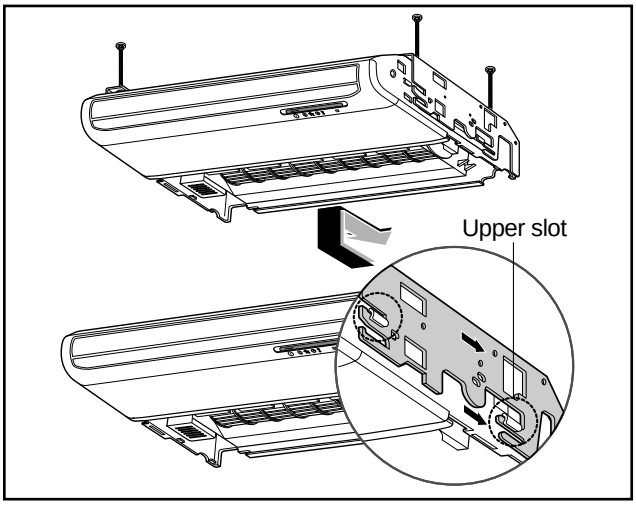

15. Installation

CAUTION

1. **Install declination** of the indoor unit is very **important for the drain** of the convertible type air conditioner.
2. Minimum thickness of the insulation for the connecting pipe shall be 7mm.
3. If the Installation Plates are fixed to horizontal line, the indoor unit after installing will be declined to the bottomside.

Front of view

• The unit must be horizontal or declined to the drain hose connected when finished installation.

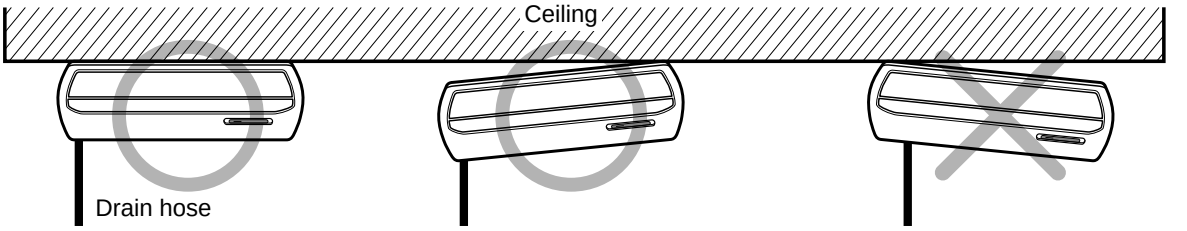

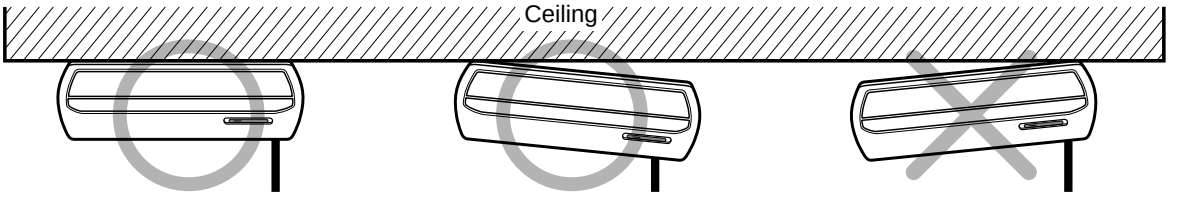

Side of view

• The unit must be declined to the bottomside of the unit when finished installation.

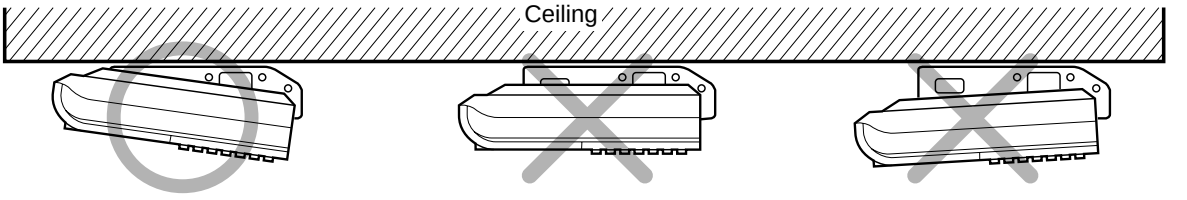

- Secure the unit to the Installation Plates with four M8 bolts and washers.

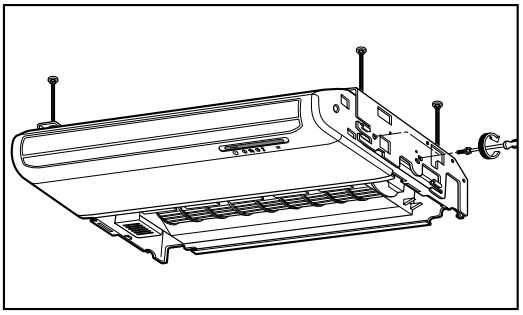

- **Before working, refer to "Flaring Work" on page 74**

- Fit the projection hooks of the side plates to the 'Side Panel'

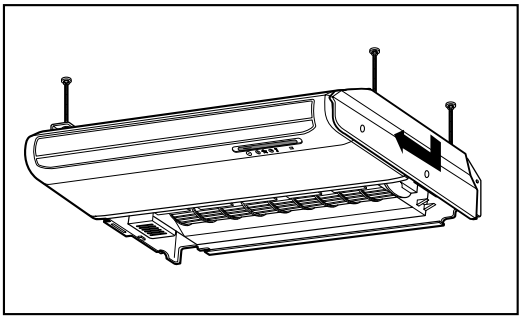

- Fasten the screws.

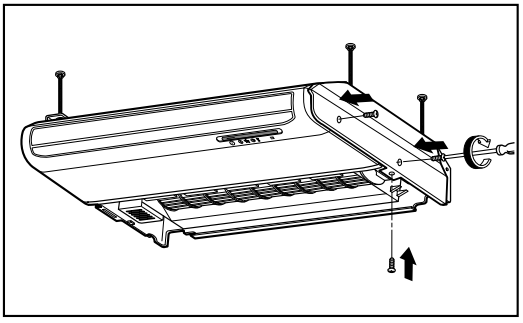

- Hook up the Inlet Grille Hook to the cabinet.
- Hang the Inlet Hanger to the screw.

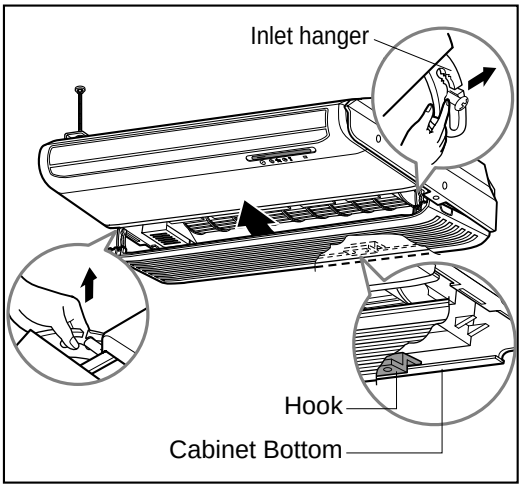

2) Installation on the Wall

- Select and mark the position for fixing bolts and piping hole.
  Decide the position for fixing bolts slightly tilted to the drain direction after considering the direction of drain hose.
- Drill the hole for anchor nut on the wall.

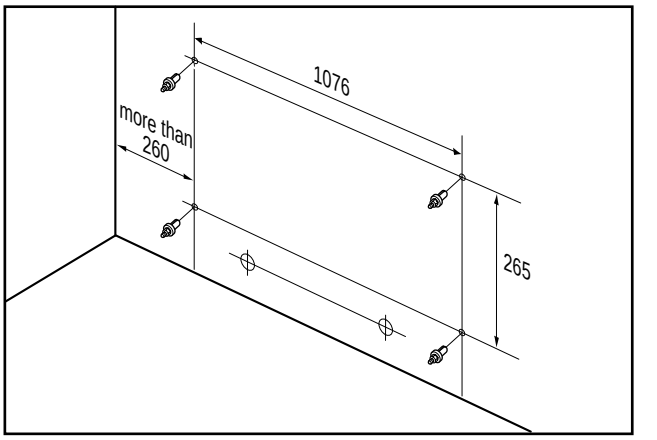

- Drill the piping hole on the wall slightly tilted to the outdoor side using a ø70 hole-core drill.

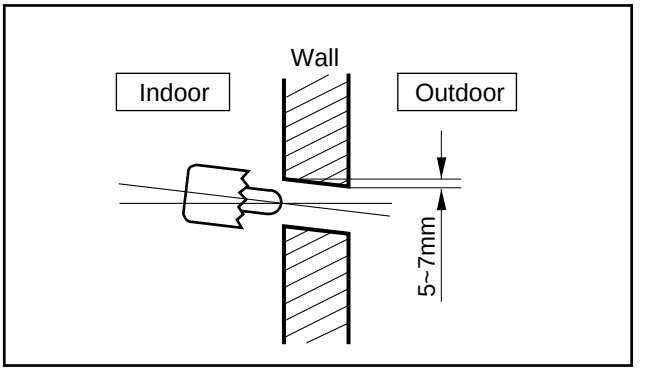

- Secure the 'Install Plate' onto the wall with four anchor bolts, washers and spring washers.

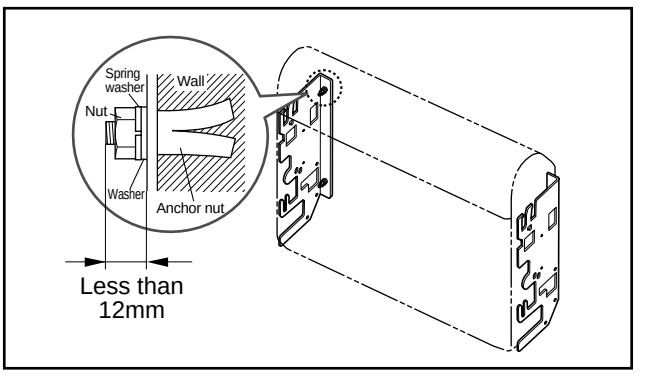

※ Before secure the Install Plates, select the bent direction of the 'Install Plate' to the inside or outside according to the installation circumstances.

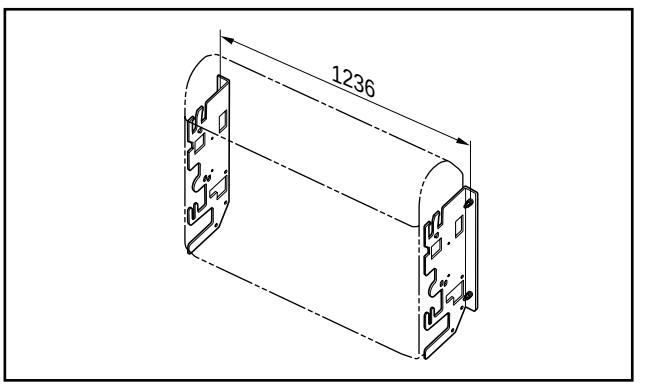

Install the Indoor unit onto Installation Plate.

- Insert 2 hooks on the both left and right side of the unit to the inner slot (wall side) of the Installation Plate.

- Secure the unit to the Installation Plate with four M8 bolts and washers.

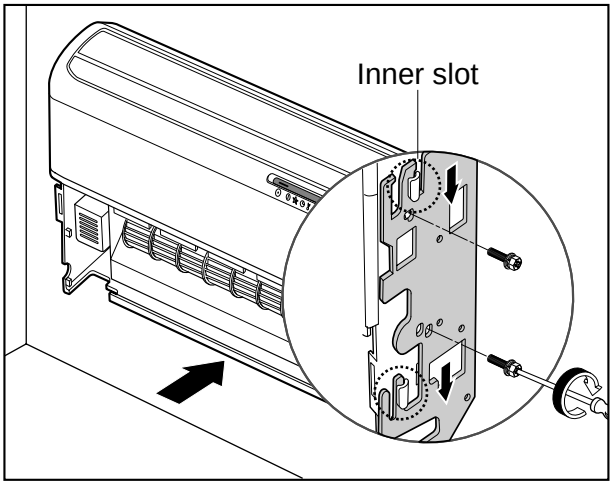

- **Before working, refer to "Flaring Work" on page 74**

- Fit the projection hooks of the side plates to the 'Side Panel' and the 'Front Panel' by lifting it.
- Fasten the screws.

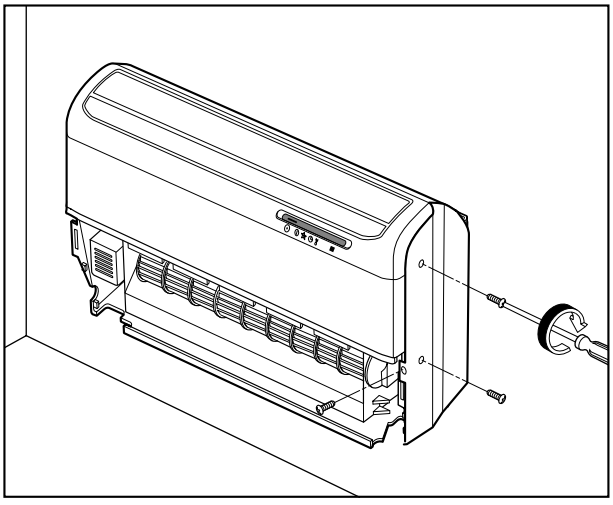

- Hook up the Inlet Grille Hook to the cabinet.
- Hang the Inlet Hanger to the screw.

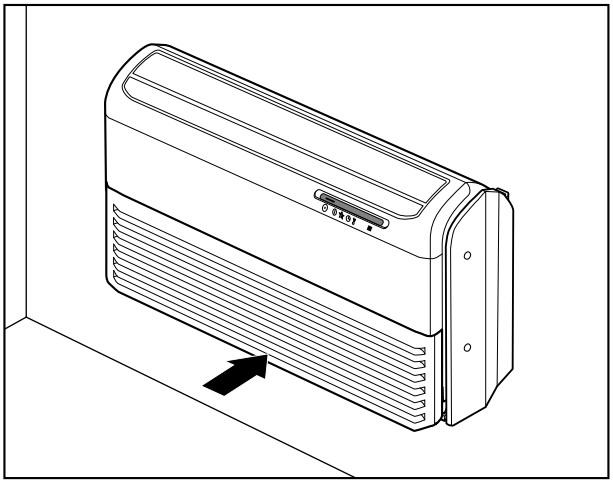

3) Installation on the floor

Installation of Mount Bracket.

- Select and mark the position for Mount Brackets and the piping hole.
- Drill the hole for the anchor nut on the wall.
- Drill the piping hole using a ø70 hole-core drill.
- Secure the Mount Brackets on the wall with four M4 screws.

Install the indoor unit onto the Mount Brackets.

- Engage the slot at the back of the unit with Mount Bracket.

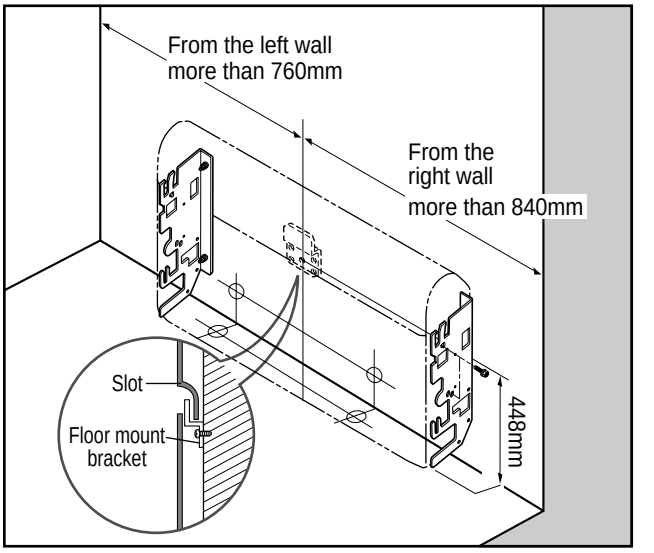

- Drill the piping hole with 70mm dia, hole core drill.
- Piping hole should be slightly slant to the outdoor side.

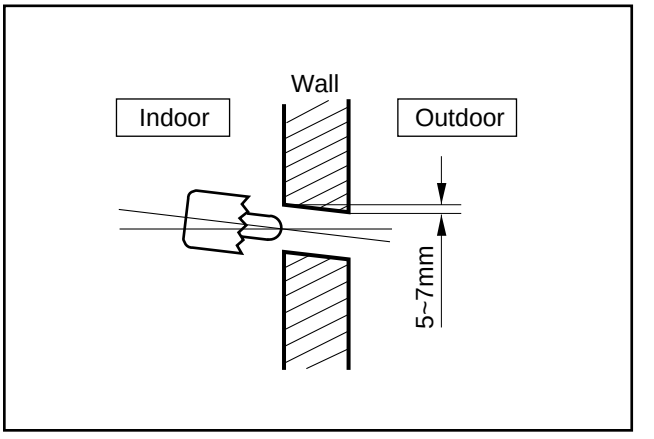

After Installing, reassemble detached parts.

- Hang the 'Inlet Grille' and hook the 'Inlet Hanger' to the Hanger Screw.
- Assemble the 'Side Plates(R,L)' with 2 screws on both left and right side.

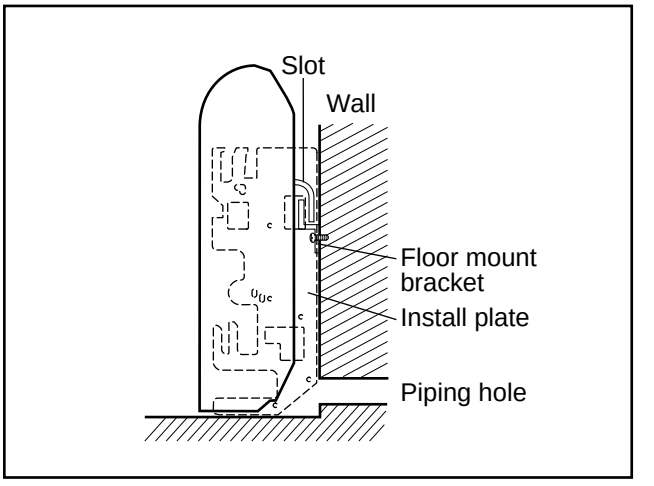

VC/VD Chassis Models

Safety considerations

Installation and servicing of air conditioning equipment can be hazardous due to system pressure and electrical components. Only trained and qualified personnel should service equipment. When working with installation and service of air conditioners, observe carefully the precautions written in the literature and labels attached to the unit along with other safety precautions that may apply. Follow all safety codes. Wear safety glasses and work gloves. Use quenching cloth for brazing operations. Have a fire extinguisher available for all brazing operations.

Warning !

Before performing service or maintenance operations on the system, turn off the main power switches of both indoor and outdoor unit. Electrical shock could cause fatal injury.

Initial check

(1) The carton should not be removed from unit until it reaches final location, to avoid damage.

(2) Inspect unit for shipping damage before installation.

(3) Check field electrical work:

(A) Proper capacity of fuses and wires should be used. Correct wiring connections and grounding should be done as specified by the local electrical area codes.

(B) Check supply voltage, which must be within the limits as shown on the nameplate.

(4) There should be easy provision of condensate drain.

(5) Use proper size of insulation material.

(6) Before installing select the location without any obstalcles. Also there should be provision for servicing the unit.

Location & Mounting

(1) Unit should be installed for horizontal and vertical discharge application only.

(2) The unit comes with, two (2) bracket hangers for mounting the unit on the ceiling, or on the wall, a packet containing a bracket for mounting the remote control unit.

(3) Attach the mounting bolt (1) at the distance specified in fig.1

(4) Fasten the bracket-hanger (2&3) to the mounting bolt with washers and nuts.

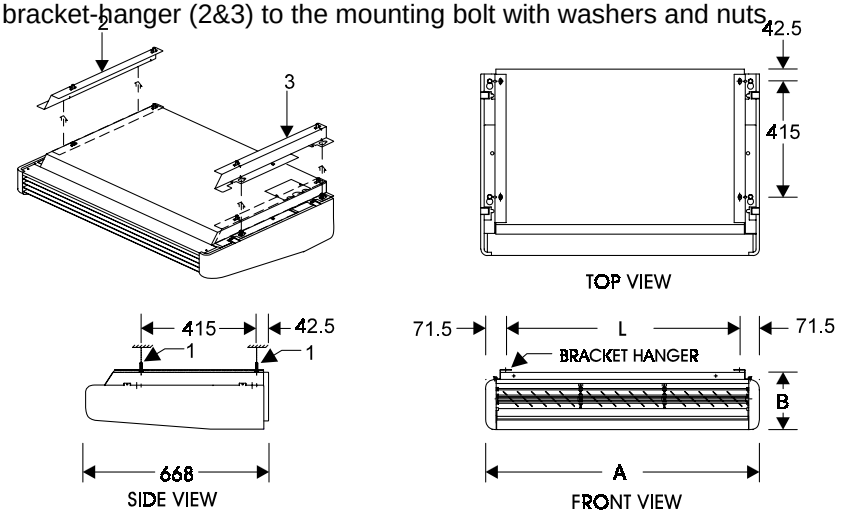

Model \ Dim (mm)	A	B	C
36k	1605	235	1440
48k, 60k	1905	270	1740

(5) Remove unit from carton and carefully place the unit's mounting bolts into the bracket-hanger's slot. After all the four (4) bolts are in the slots, push the unit towards bolts slowly. Secure the unit on the bracket-hanger by tightening all the four (4) bolts.

Condensate drain

(1) The unit should be at the reasonable level and pitched toward the drain, so as to ensure proper drainage.

(2) Connect the soft hard vinyl chloride pipe to the coupling, see fig.4

(3) Drainage is done by gravity effect, therefore the piping outside the unit should have a slope downwards.

(4) Avoid draining as shown in fig.5

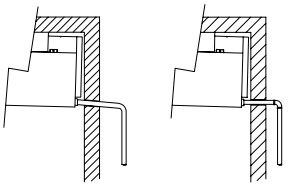

Fig. 2

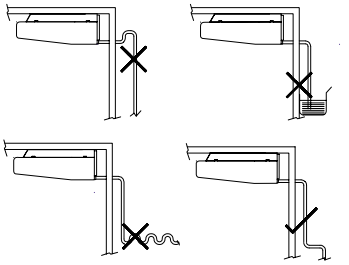

Fig. 3

Refrigerant piping

(1) Indoor unit should have flared connections.

(1.1) Make flare joints for both suction and liquid line .

(1.2) Ensure tube and fitting are in line before tightening the nut to provide concentric seating of tube on fitting to prevent leakage.

(2) The pipes can be bend around the rear as shown in figure 4.

(3) Brazing should be performed with a constant purge of nitrogen through the piping. This is to keep inside of tubing clean.

(4) Insulate suction and liquid line separately to prevent sweating .

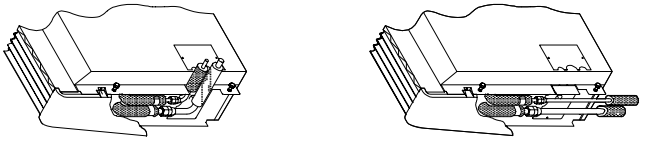

Fig. 4

(5) Use two spanners to connect the flare nut connections. See fig.5

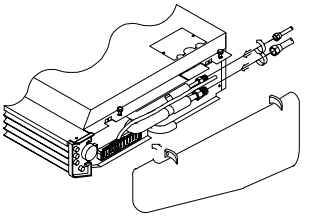

Fig. 5

(6) Recommended combinations.

(A) Total maximum length up to 20m.

(B) Limit the number of bends to less than 8.

(C) Piping fall limitation is upto 15m, see figure 6.

(D) Piping head limitation is upto 8m, see figure 6.

(7) Gas leakage test.
Check all the brazed and flare connections for gas leakage.

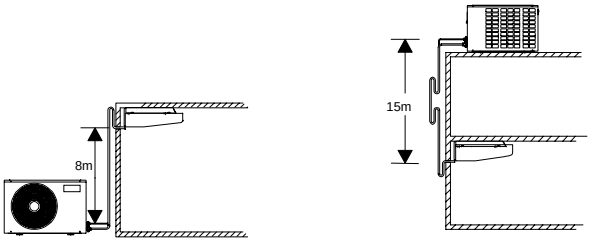

Fig. 6

Electrical wiring

(1) There should be sperate power spply dedicated only for air conditioner.

(2) Wiring should be done in accordance to the local area codes.

(3) Ground both indoor and outdoor unit.

(4) Check wiring connections in accordance to the wiring diagram.

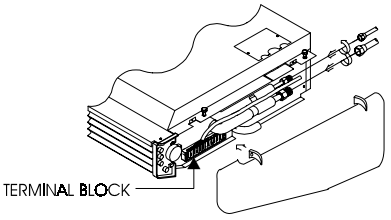

Fig. 7

Important

(1) Secure the cables with in the cable clamp after connecting them to the terminal block.

(2) Authorized electricians should be hired for cabling.

(3) The remote controller is located inside the unit, behind the return air filter.

Installation

When mounting the indoor unit on the ceiling, floor or wall follow the following instructions as stated below:

(1) Select a location that permits even air circulation throughout the room.

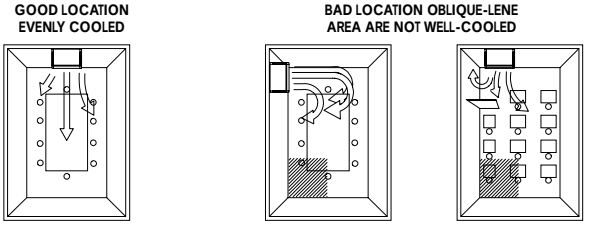

Fig. 8

(2) There should be Service space when the unit is mounted on the ceiling.

Fig. 9

(3) There should be Service space when the unit is mounted on the floor/wall.

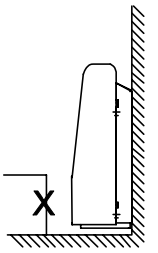

Fig. 10

Air flow direction adjustment

(1) To adjust the upward/downward direction of the air current, move the horizontal louver. Ensure thit the louver is not positioned so as to completely cut off the air flow from the unit.

(2) To adjust the lateral direction of air currents activate the air sweep motor.

Filter removal for cleaning

(1) Push down the clip at the top of the front grill.

(2) Swing down the grill and remove the filter for cleaning.

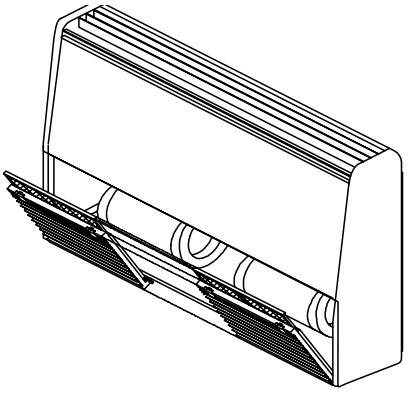

Fig. 11

VK/VL Chassis Models

■ Installation of Unit

Unit should be installed for horizontal and vertical discharge application only.

CASE 1

POSITION OF SUSPENSION BOLT

- Apply a joint-canvas between the unit and duct to absorb unnecessary vibration.

(Unit:mm)

Dimension / Model	A	B	C
36k	1350	1255	220
48k, 60k	1750	1655	220

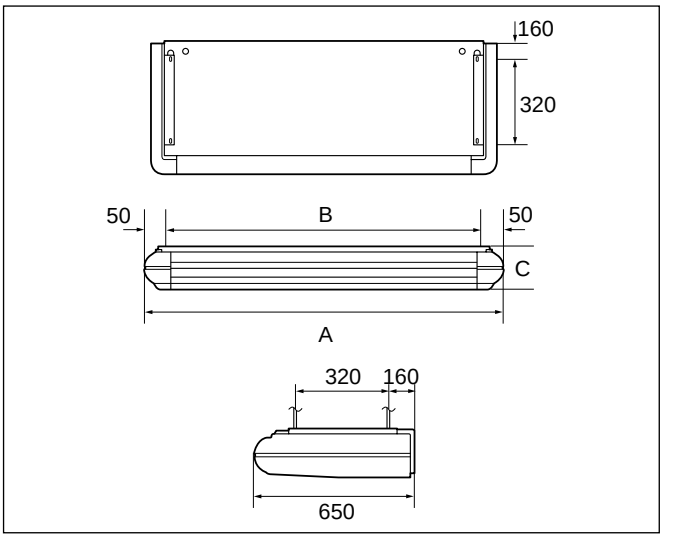

CASE 2

- Install the unit leaning to a drainage hole side as a figure for easy water drainage.

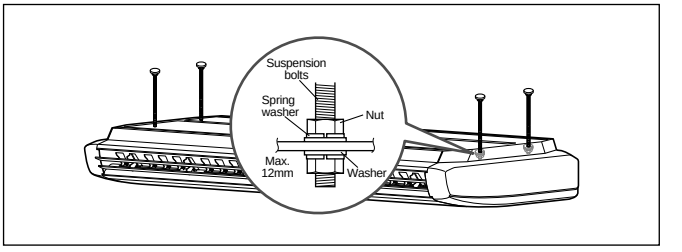

POSITION OF CONSOLE BOLT

- A place where the unit will be leveled and that can support the weight of the unit.
- A place where the unit can withstand its vibration.
- A place where service can be easily performed.

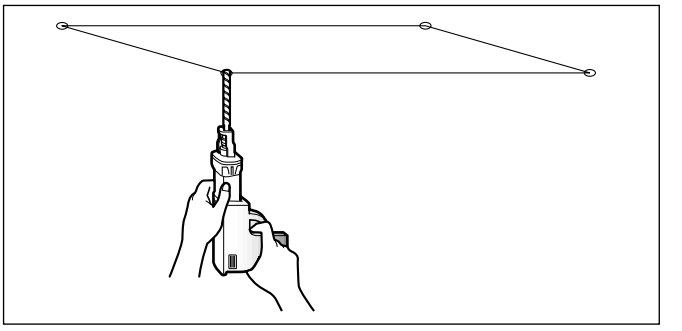

- Select and mark the position for fixing bolts.
- Drill the hole for set anchor on the face of ceiling.

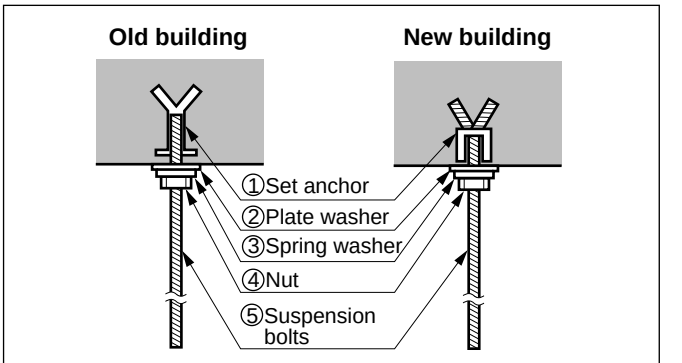

- Insert the set anchor and washer onto the suspension bolts for locking the suspension bolts on the ceiling.
- Mount the suspension bolts to the set anchor firmly.
- Secure the installation plates onto the suspension bolts (adjust level roughly) using nuts, washers and spring washers.

- Local supply
  - ① Set anchor
  - ② Plate washer - M10
  - ③ Spring washer - M10
  - ④ Nut - W3/8 or M10
  - ⑤ Suspension bolt - W3/8 or M10

⚠CAUTION

: Tighten the nut and bolt to prevent unit falling

■ Preparing work for Installation

Open side cover

1. Remove two screws from side-cover as shown in fig.
2. Unlock side-cover from side panel by slightly pulling the edge of side cover.
3. Tap the side-cover with your palm on the backside.(Inlet grill side.)
4. Hold the side-cover with other hand while tapping to prevent it to fall down.

Recommendation: it is recommended to select the left side for drain to have common hole in the side-cover along with pipe and wiring.

5. Remove the rubber stopple in the desired drain direction.
6. Knock out the pipe hole from the left side-cover with the help or nipper/plier.
7. Knock hole on right side-cover only if right side is selected for water drain.

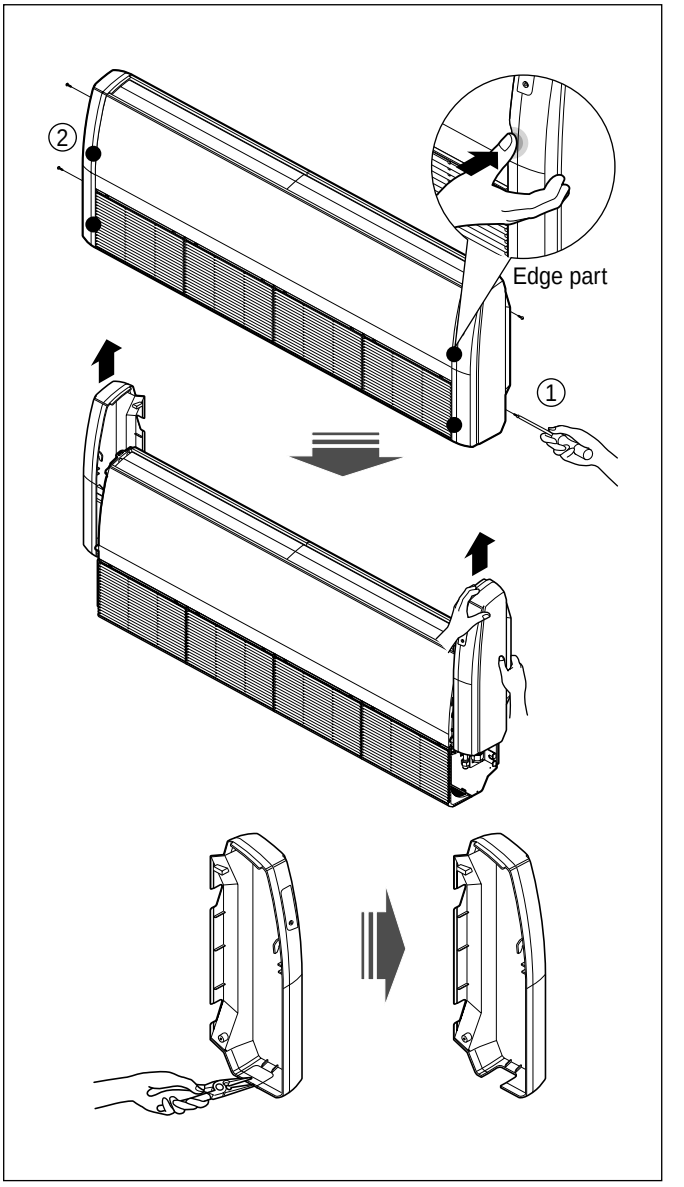

1) Mounting the anchor Nut & Bolt(Ceiling Mounting)

MOUNTING THE ANCHOR NUT AND BOLT

- Prepare 4 suspension bolts. (Each bolts length should be same.)
- Measure and mark the position for the Suspension bolts and the piping hole.
- Drill the hole for anchor nut on the ceiling.
- Insert the nuts and washer onto the suspension bolts for locking the suspension bolts on the ceiling.
- Mount the suspension bolts to the anchor-nuts firmly.
- Secure the hangers onto the Suspension bolts (adjust level roughly.) using nuts, washers and spring washers.
- Adjust a level with a level gauge on the direction of left-right, back-forth by adjusting suspension bolts.
- Adjust a level on the direction of top-bottom by adjusting supension bolts. Then the unit will be declined to the bottomside so as to drain well.

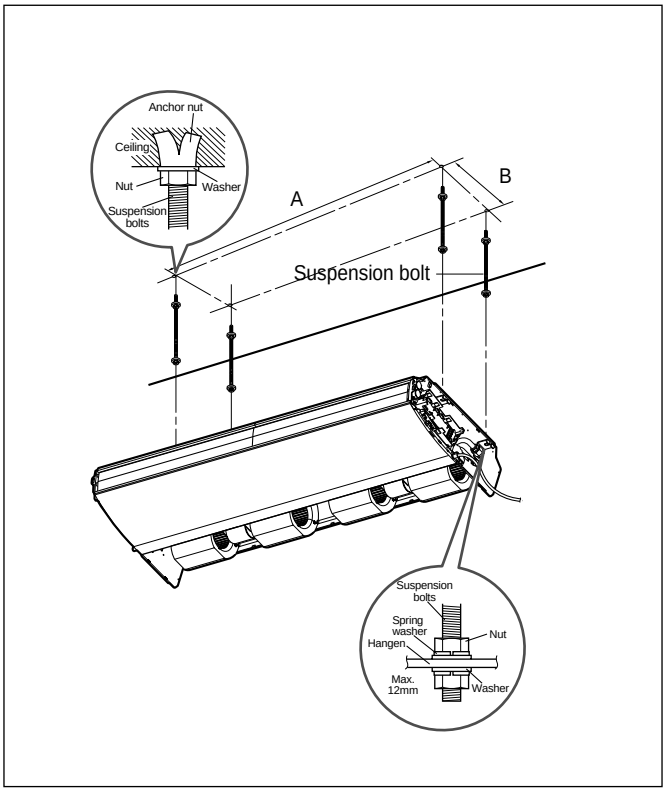

Dim. / Model	A	B
48k, 60k	1655	320
36k	1255	320

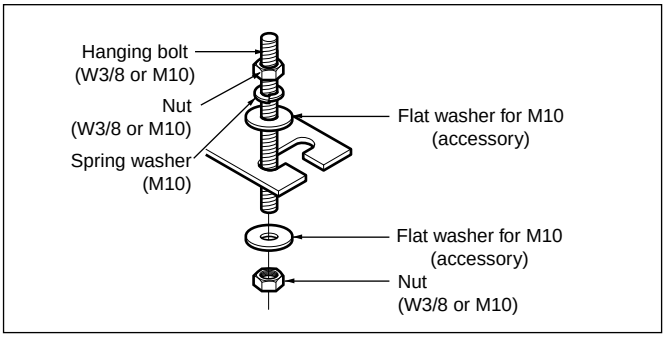

⚠ CAUTION

: Tighten the nut and bolt to prevent unit falling.

DRILL A HOLE IN THE WALL.

- Drill the piping hole with a ø70mm hole core drill. Drill the piping hole at either the right or the left with the hole slightly slanted to the outdoor side.

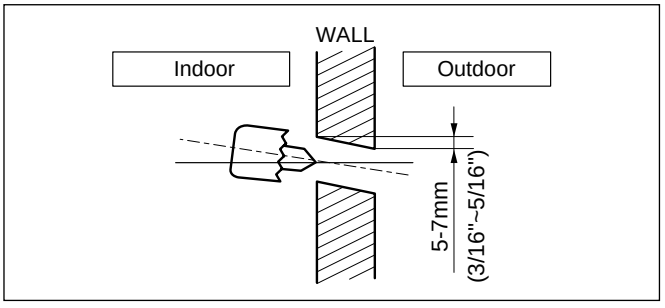

2) Indoor unit installation

Hang the Indoor unit on suspension bolt as per following guidelines:

1. Lift the indoor unit to sufficient height.
2. Insert the suspended part of four suspension bolt in the four hangers provided on the side of main body one by one.
3. Lower the indoor unit till the hangers rest on their respective flat washer.
4. Adjust the level in the top down direction by adjusting the suspension bolts.
   Inclined the indoor unit as per direction provided in the fig

⚠ CAUTION

: Installation Information For Declination

1. **Install declination** of the indoor unit is very **important for the drain** of the convertible type air conditioner.
2. Minimum thickness of the insulation for the connecting pipe shall be 7mm.
3. If the Installation Plates are fixed to horizontal line, the indoor unit after installing will be declined to the bottomside.

Front of view

• The unit must be horizontal or declined to the drain hose connected when finished installation.

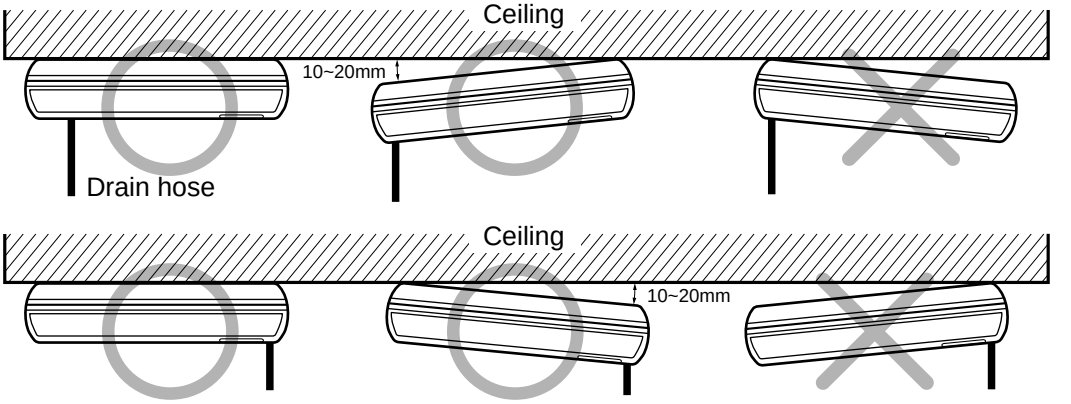

Side of view

• The unit must be declined to the bottomside of the unit when finished installation.

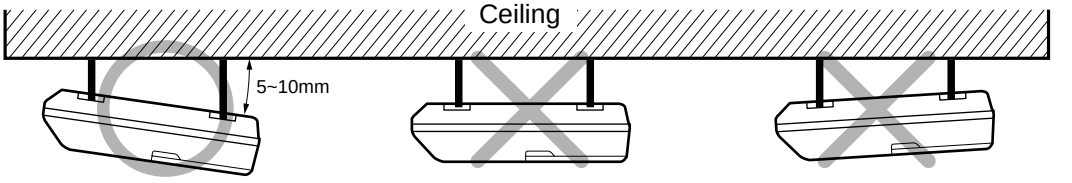

INSULATION, OTHERS

Insulate the joint and tubes completely.

THERMAL INSULATION All thermal insulation must comply with local requirement.

REFRIGERANT PIPE

- Insulate and tape both the gas piping and liquid piping.

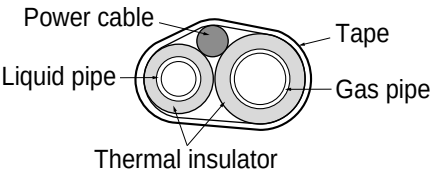

TEST AND CHECK

■ *After all workings are finished, check the working and operation.*

- Air distribution .....Is the air circulation good?
- Drain .....Is the drainage smoothly and no sweating?
- Gas leakage .....Is the piping connection correctly?
- Wiring .....Is the wiring connection correctly?
- Lock-bolt .....Is the lock-bolt of compressor loosened?

REFRIGERANT PIPING

Perform the work according to the Service Manual or Installation Guide.

- Use two spanners when connecting the refrigerant pipe to the unit.
- Make a bend with a radius as large as possible.
- Perform air purge with R-22 or vacuum drying.
- When piping work is finished, check all joints.

■ Add refrigerant if piping is over 5m.

Model	Additional Refrigerant
LV-C488LLA0 LV-C488LLB0 LV-C608LLA0 LV-C608LLB0 LV-H488LLA0 LV-H488LLB0 LV-H608LLA0 LV-H608LLB0	60g/m
LV-C368KLA0 LV-C368KLB0 LV-H368KLA0 LV-H368KLB0 LV-C368KLA1 LV-C488LLA1 LV-C608LLA1	50g/m

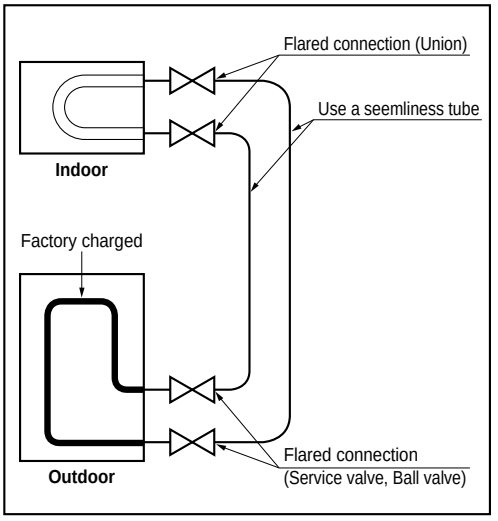

INSTALLATION OF OUT DOOR UNIT

Select a location that satisfies the following conditions. Install the unit firmly in place.

■ **Select the following location**

- A place where the air conditioner can get good ventilation.
- A place where it shall not annoy the neighbors.
- A place where the unit shall be leveled and that can support the weight of unit and withstand its vibrations.

■ **Keep a maintenance space**

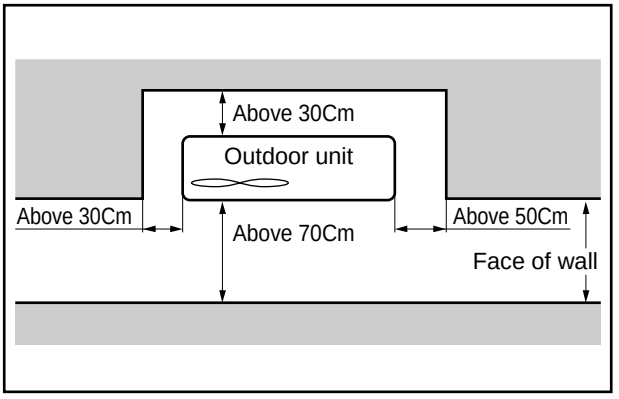

3) Flaring Work

Main cause for gas leakage is due to defect in flaring work. Carry out correct flaring work in the following procedure.

Cutting the pipes and the cable.

1. Use the piping kit accessory or the pipes purchased locally.
2. Measure the distance between the indoor and the outdoor unit.
3. Cut the pipes a little longer than measured distance.
4. Cut the cable 1.5m longer than the pipe length.

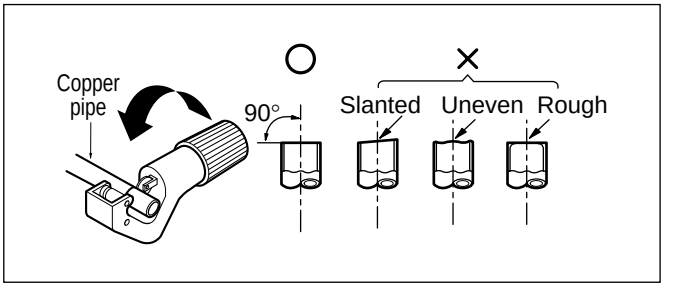

Removing burrs

1. Completely remove all burrs from the cut cross section of pipe/tube.
2. Put the end of the copper tube/pipe in a downward direction as you remove burrs in order to avoid dropping burrs into the tubing.

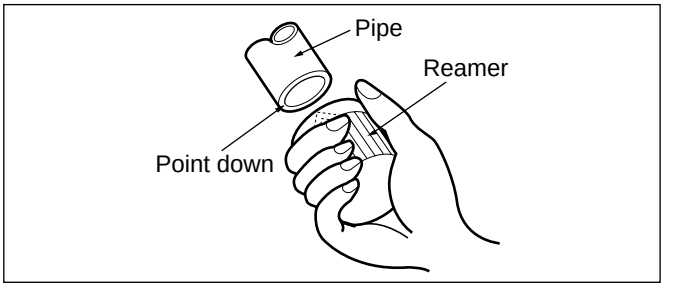

Putting nut on

1. Remove flare nuts attached to indoor and outdoor unit, then put them on pipe/tube having completed burr removal.
   (not possible to put them on after flaring work)

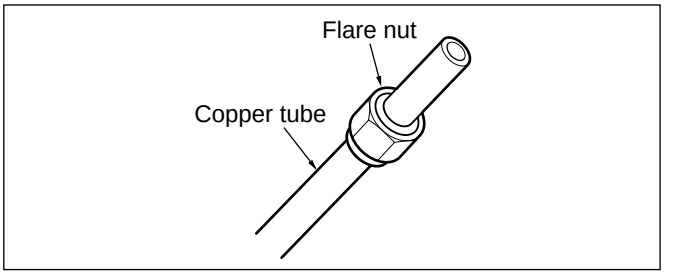

Flaring work

1. Firmly hold copper pipe in a die in the dimension shown in the table below.
2. Carry out flaring work with the flaring tool.

Outside diameter		A
mm	inch	mm
Ø6.35	1/4	0~0.5
Ø9.52	3/8	0~0.5
Ø12.7	1/2	0~0.5
Ø15.88	5/8	0~1.0
Ø19.05	3/4	1.0~1.3

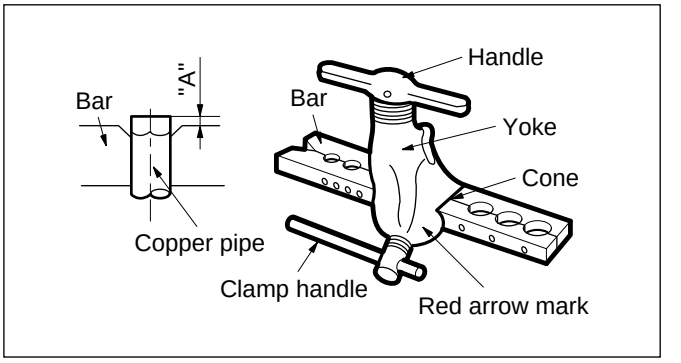

Check

1. Compare the flared work with the figure by.
2. If a flared section is defective, cut it off and do flaring work again.

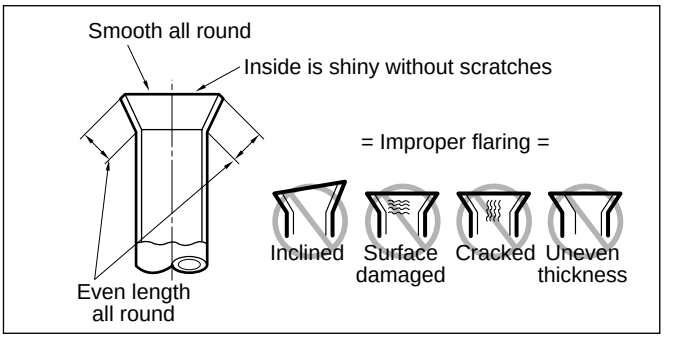

4) Connecting of Piping - Indoor

1. Prepare the indoor unit piping and drain hose for installation thought the wall.
2. Align the center of the liquid side pipe.
3. Sufficiently tight the flare nut of the liquid side pipe with hands.
4. Tight the flare nut with two spanner, as shown.
5. Align the center of gas side pipes.
6. Sufficiently tight the flare nut of the gas side pipe with hands.
7. Tight the flare nut with two spanner as shown.

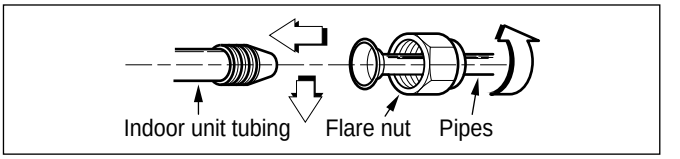

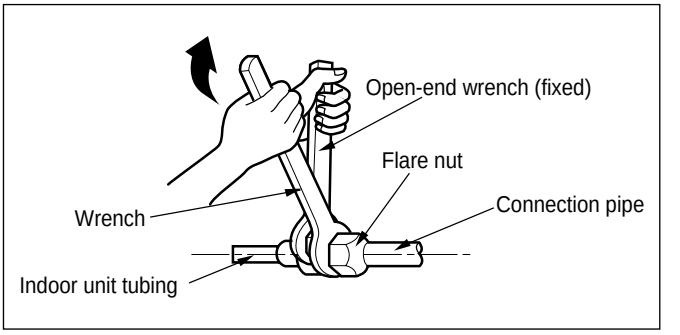

Outside diameter		Torque
mm	inch	kg·m
Ø6.35	1/4	1.8
Ø9.52	3/8	4.2
Ø12.7	1/2	5.5
Ø15.88	5/8	6.6
Ø19.05	3/4	6.6

8. If drain pipe need to be extended at the indoor side attach the drain pipe with indoor unit drain hose as shown in fig.

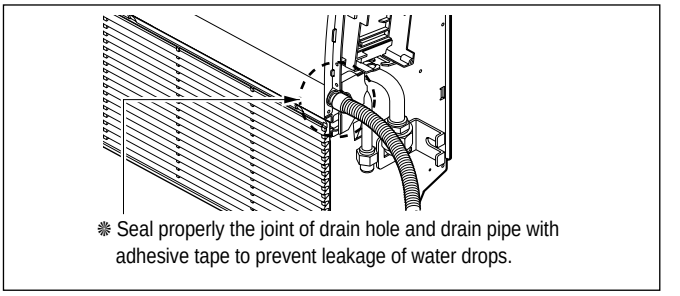

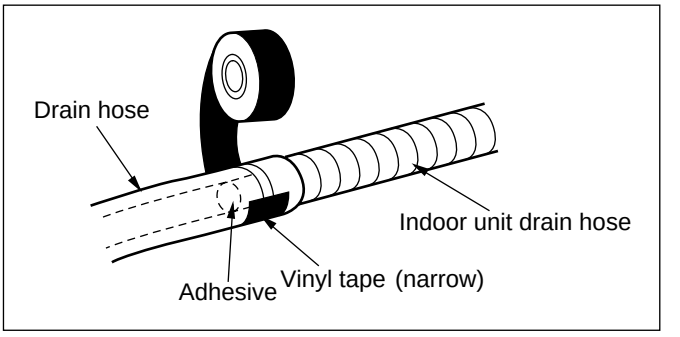

Wrap the insulation material around connection portion

9. Overlap the connection connecting pipe insulation material and the indoor pipe insulation martial. Bind them together with the vinyl tape. So that here may not be any gap.

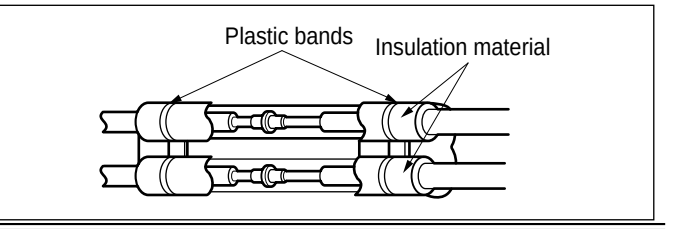

10. If the piping and the drain hose are in common direction bundle the piping and the drain hose together by wrapping them with vinyl tape.

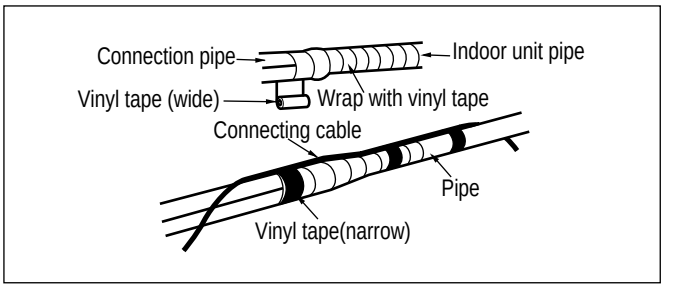

11. Rout the indoor tubing and the drain hose to the required piping hole.

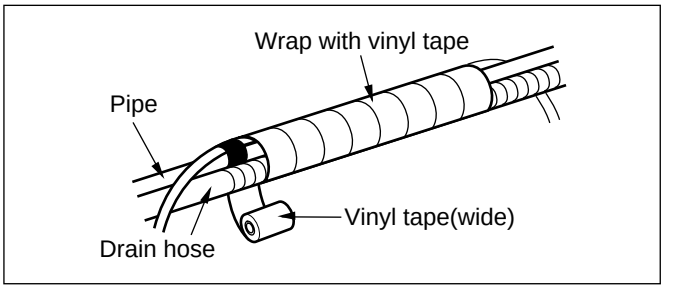

NOTICE

Common direction of drain and piping. Tape the tubing, drain hose and the connecting cable. Be sure that the drain hose is located at the lowest side of the bundle. Locating at the upper side can cause drain pan to overflow inside the unit.

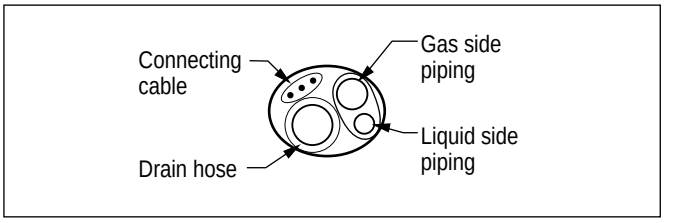

NOTICE

If the drain hose is routed inside the room, insulate the hose with an insulation material* so that dripping from "sweating"(condensation) will not damage furniture or floors.
***Foamed polyethylene or equivalent is recommended.**

5) Connection of the pipes-Outdoor

Align the center of the pipings and sufficiently tighten the flare nut by hand.

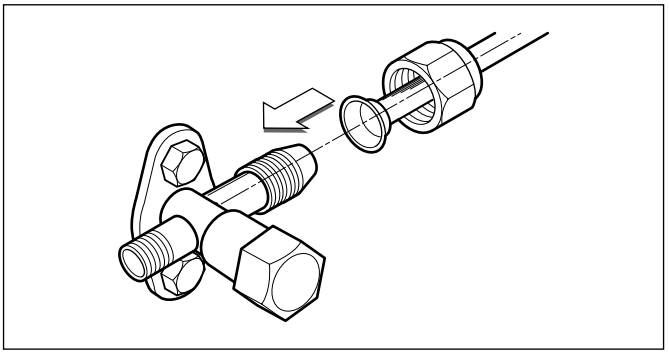

Finally, tighten the flare nut with torque wrench until the wrench clicks.

- When tightening the flare nut with torque wrench, ensure the direction for tightening follows the arrow on the wrench.

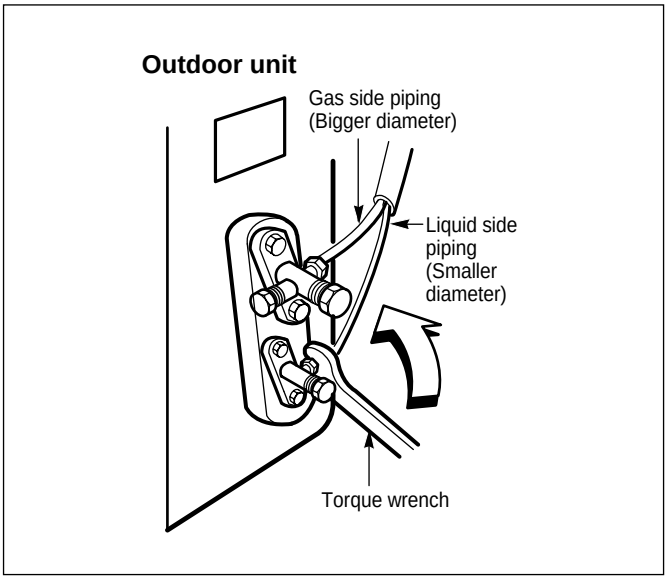

Outside diameter		Torque
mm	inch	kg·m
Ø6.35	1/4	1.8
Ø9.52	3/8	4.2
Ø12.7	1/2	5.5
Ø15.88	5/8	6.6
Ø19.05	3/4	6.6

6) Checking the Drainage

1. Set the air direction louvers up-and-down to the position(horizontally) by hand.

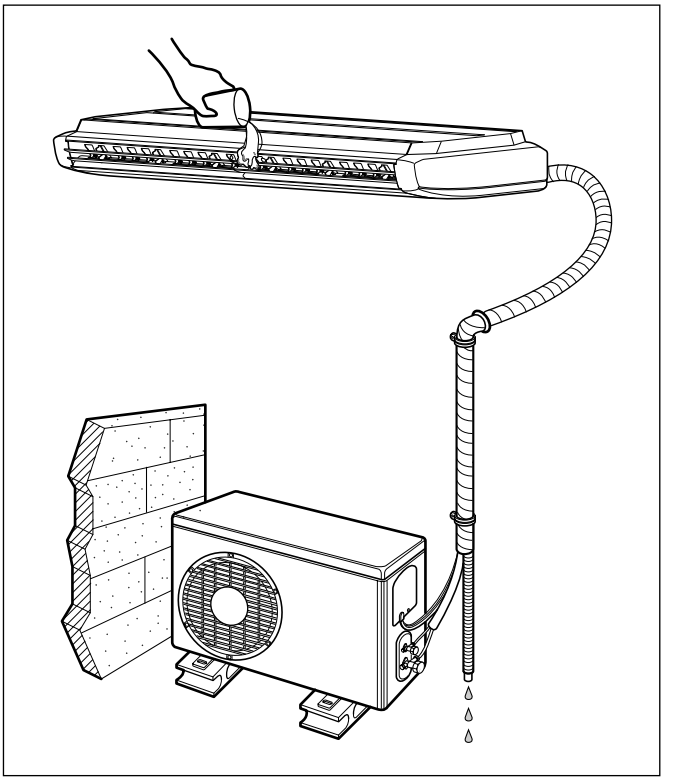

To check the drainage.

1. Pour a glass of water on the evaporator using a kettle.
2. Ensure the water flows through the drain hose of the indoor unit without any leakage and goes out the drain exit.

Drain piping

1. The drain hose should point downward for easy drain flow.

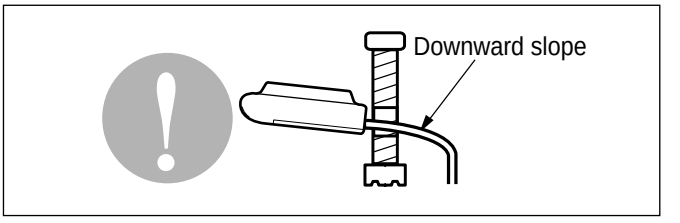

2. Do not make drain piping like the following.

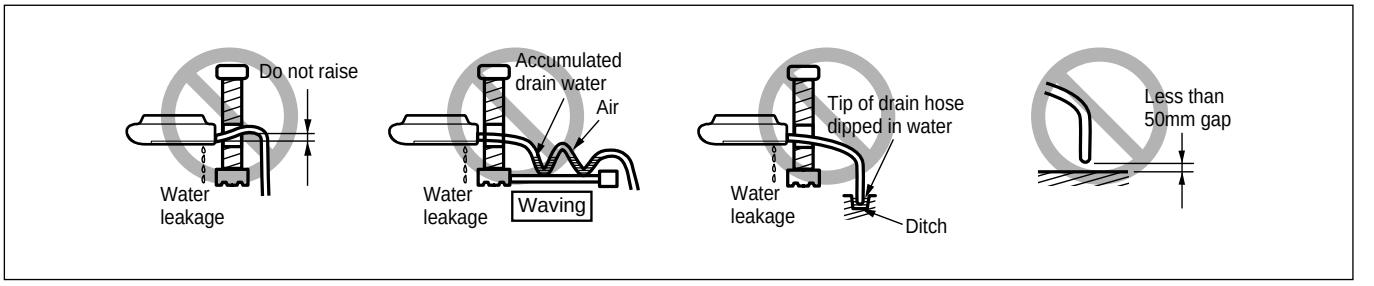

7) Forming the Piping

Form the piping by wrapping the connecting portion of the indoor unit with insulation material and secure it with two kinds of vinyl tapes.

- If you want to connect an additional drain hose, the end of the drain outlet should be routed above the ground. Secure the drain hose appropriately.

In cases where the outdoor unit is installed below the indoor unit perform the following.

1. Tape the piping, drain hose and connecting cable from down to up.
2. Secure the tapped piping along the exterior wall using saddle or equivalent.

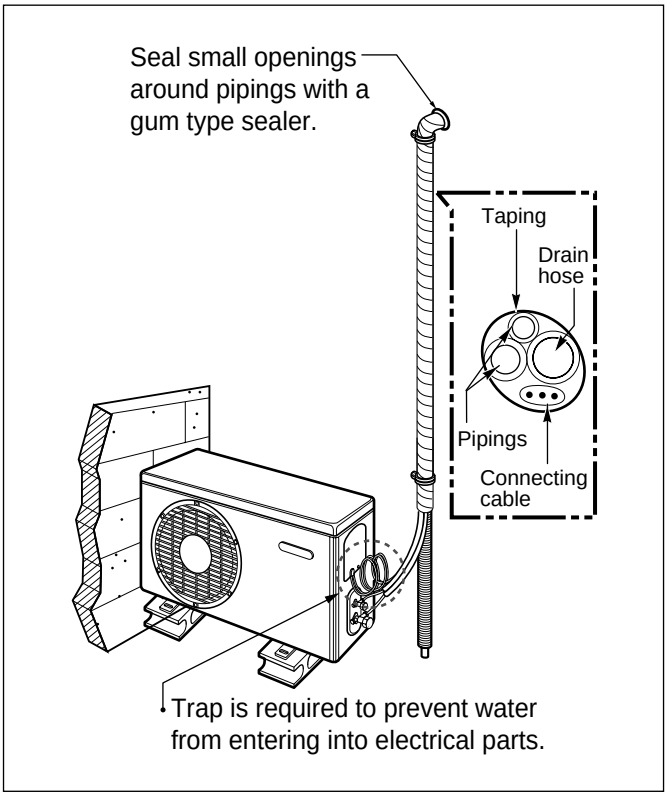

In cases where the outdoor unit is installed above the Indoor unit perform the following.

1. Tape the piping and connecting cable from down to up.
2. Secure the taped piping along the exterior wall. Form a trap to prevent water entering the room.
3. Fix the piping onto the wall by saddle or equivalent.

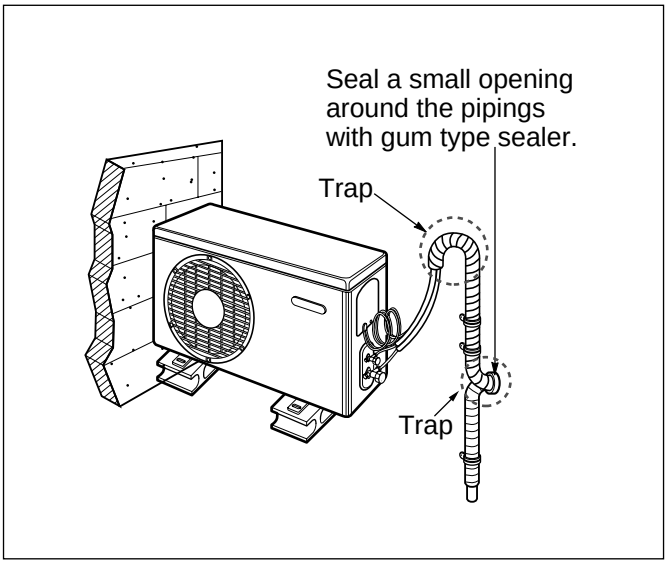

15.4 Wiring Connection

VB Chassis Models

1) Connecting cables to the Indoor Unit

1) Firstly remove inlet grille then remove the 'Air Guide-L' by loosening two screws.
2) Connect the wires to the terminals on the control board individually according to the outdoor unit connections.
   - Ensure the color of the wires of outdoor unit and the terminal No. are the same as those of indoor unit respectively

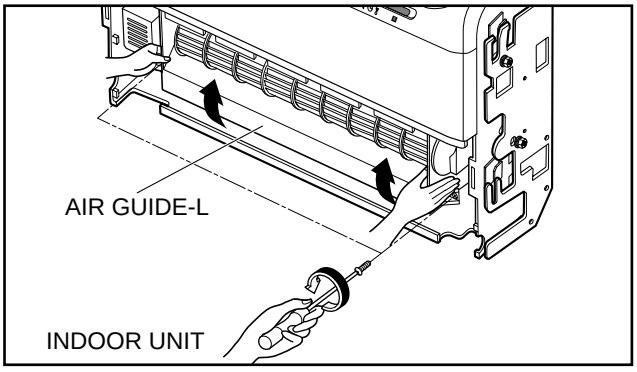

- Cooling only type

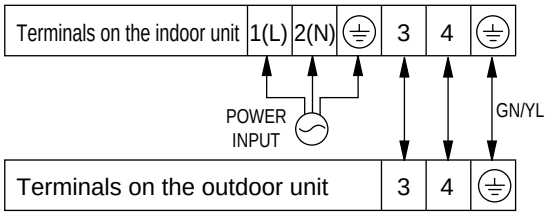

- Cooling & Heating type

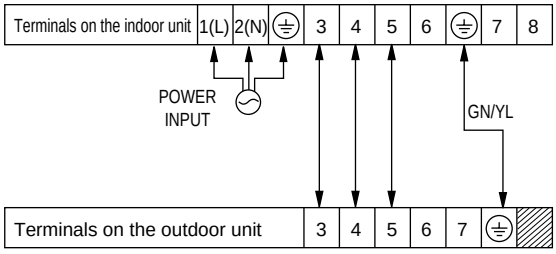

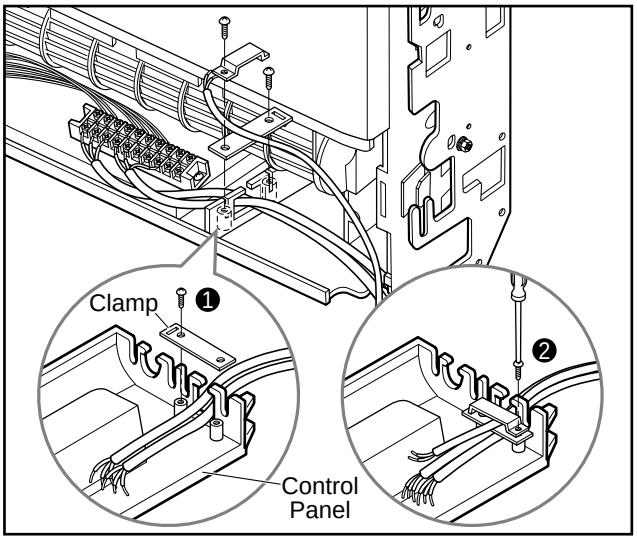

2) Clamping of cables

1) Arrange two power cables on the control panel.
2) First, fasten the steel clamp with a screw to the inner boss of control panel for securing the wires.
3) For the cooling model, fix the other side of the clamp with a screw strongly.
   For the heat pump model, put the 0.75mm² cable(thinner cable) on the clamp and tighten it with a plastic clamp to the other boss of the control panel.
4) In Australia, the length of power supply cord from the entry of the power supply to the live pin on the power plug should be over 1.8m.

CAUTION

The power cord connected to the indoor unit should be complied with the following specifications (Type H05VV-F(Indoor) approved by HAR or SAA).

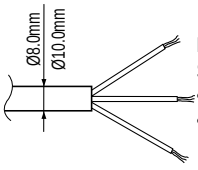

NORMAL CROSS-SECTIONAL AREA
- 2.5mm²(24K)
- 2.0mm²(18K)

The power cable connected between the indoor and outdoor unit should be complied with the following specifications (Type H07RN-F approved by HAR or SAA).

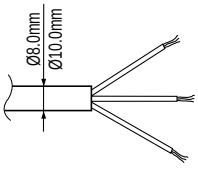

NORMAL CROSS-SECTIONAL AREA
- 2.5mm²(24K)
- 2.0mm²(18K)

The connecting cable connected between the indoor and outdoor unit should be complied with the following specifications (Type H07RN-F approved by HAR or SAA).

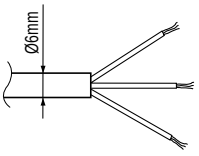

NORMAL CROSS-SECTIONAL AREA 0.75mm²

3) Connecting the cable to Outdoor Unit

1. Remove the control cover from the unit by loosening a screw.
   Connect the wires to the terminals on the control board individually as specified.
2. Secure the cable onto the control board with the holder (clamper).
3. Refix the cover control to the original position with the screw.
4. Use a recongnized circuit breaker 20A(18k, 24k) between the power source and the unit. A disconnection device to adequately disconnect all supply lines must be fitted.

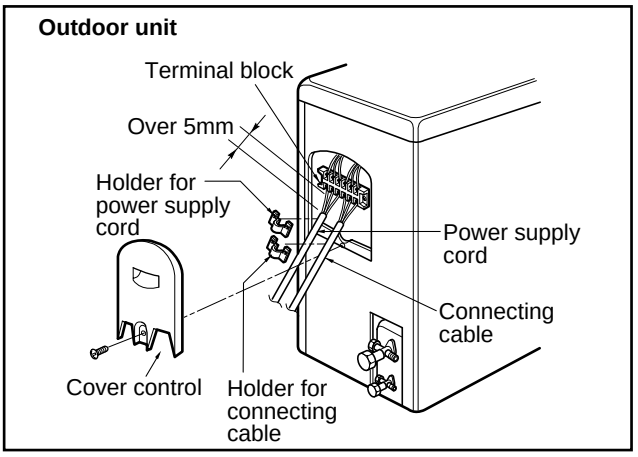

VC/VD Chassis Models

ELECTRIC WIRE SIZE

MODEL	OUTDOOR FUSE CONTROL	INDOOR FUSE CONTROL	CIRCUIT BREAKER	ELECTRIC WIRE SIZE (SQMM)	
				ON THE GROUND 60°C	IN PIPE 75°C
36k	10A / 250V	0.5A / 250V	30A / 3P.	-	6
48k/60k	10A / 250V	0.5A / 250V	50A / 3P.	-	6

CAUTION

After the confirmation of the above conditions, prepare the wiring as follows:

1) Never fail to have an individual power specially for the air conditioner. Guidence for wiring is in the circuit diagram which is pasted on the inside of control box cover.

2) Provide a circuit breaker switch between power source and the unit.

3) The screw which fasten the wiring in the casing of electrical fittings are liable to become loose due to vibrations, to which the unit is subjected during the course of transportation. Check them and make sure that they all are tightly fastened. (If they are loose, it could burn-out the wires.)

4) Confirm specification of power source.

5) Confirm electrical capacity is sufficient.

6) Be sure that the starting voltage is maintained at more than 90 percent of the rated voltage marked on the name plate.

7) Confirm the cable thickness should be proper as specified in the power sources specification. (Particularly note the relation between cable length and thickness.)

8) Never fail to equip a leakage breaker where it is wet or moist.

9) The following troubles would be caused by voltage drop-down.

- Vibration of a magnetic switch, damage on the contact point there of, fuse breaking, disturbance to the normal function of a overload protection device.
- Proper starting power is not given to the compressor.

10) The means for disconnection from a power supply shall be incorporated in the fixed wiring and have an air gap contact separation of at least 3mm in each active(phase) conductors.

VK/VL Chassis Models

1) Connecting cables to the Indoor Unit

■ Connect the wires to the terminals on the control board individually according to the outdoor unit connection.

- Ensure that the color of the wires of outdoor unit and the terminal No. are the same as those of indoor unit respectively

■ 36K/48K/60K Btu (3Ø, 380V~415V)

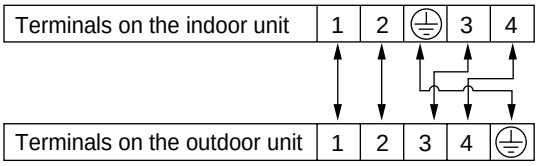

3 Phase
Heat Pump Model

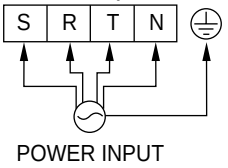

3 Phase
Cooling Model Only

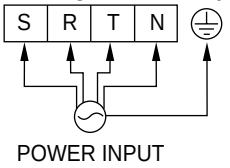

⚠ CAUTION

: If a power plug is not used, provide a circuit breaker between power source and the unit as shown by.

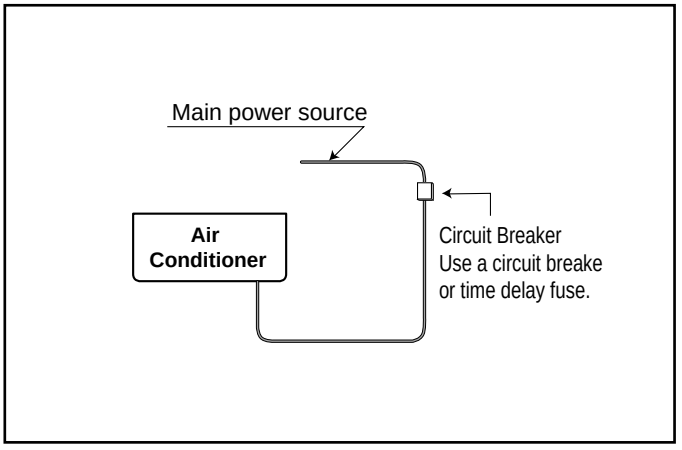

⚠ CAUTION

The power cord connected to the outdoor unit should be complied with the following specifications (Rubber insulation, type H05RN-F approved by HAR or SAA).

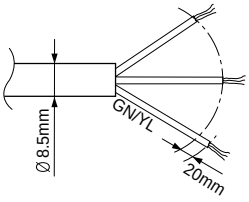

Capacity	Wire Size
36kBtu/h 48kBtu/h 60kBtu/h	5 x 3.5mm^2

The connecting cable connected to the indoor and outdoor unit should be complied with the following specifications (Rubber insulation, type H05RN-F approved by HAR or SAA).

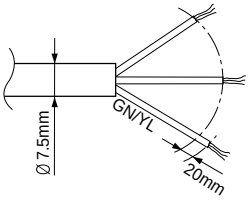

NORMAL CROSS-SECTIONAL AREA 5 x 1.25mm^2 (36k/48k/60k)

If the supply cord is damaged, it must be replaced by a special cord or assembly available from the manufacturer or its service agent.

⚠ CAUTION

Make sure that the screws of the terminal are not loose.

Electrical Wiring - VK/VL Chassis

Perform the electrical wiring work according to the electrical wiring connection.

- All wiring must comply with local requirements.
- Select a power source that is capable of supplying the current required by the air conditioner.
- Use a recognized circuit breaker between the power source and the unit. A disconnection device to adequately disconnect all supply lines must be fitted.
- Capacity of circuit breaker

Capacity	Ampere
36kBtu/h	20A
48kBtu/h	25A
60kBtu/h	25A

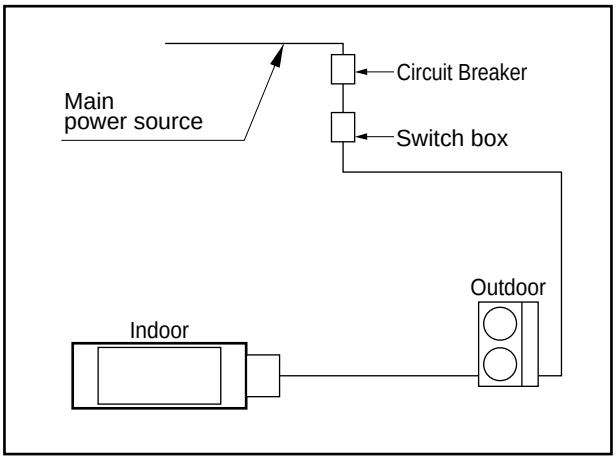

Connecting the Cables

Indoor

1. The control box of indoor unit is on the left side when seen from front side.
2. Connect the cable to the indoor unit by connecting the wires to the terminals on the control board individually according to the outdoor unit connection (Ensure that the color of the wires of the outdoor unit and the terminal no. are same as the those of the indoor unit)

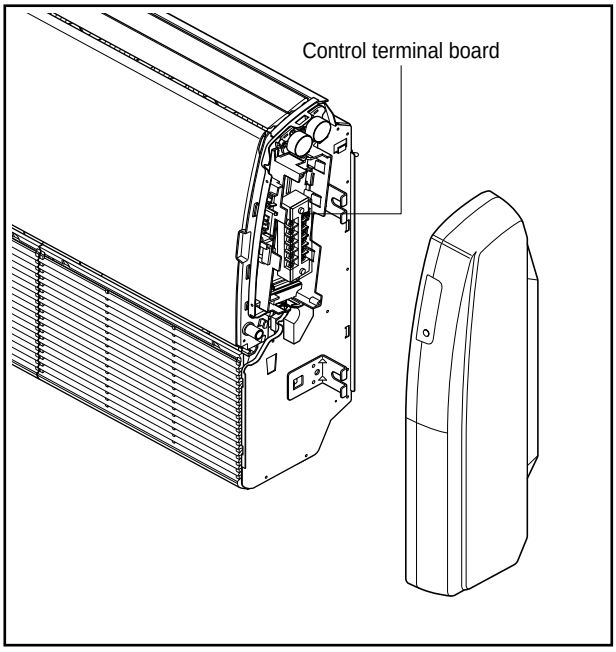

⚠ CAUTION

- **The circuit diagram behind the panel is subject to change without notice.**
- **The earth wire should be longer than the common wires.**
- **When installing, refer to the circuit diagram behind the panel front of the indoor unit.**
- **Connect the wires firmly so that they may not be pulled out easily.**
- **Connect the wires according to color codes, referring to the wiring diagram.**

2) Connecting the cable to the Outdoor Unit

1. Remove the Cover control from the unit by loosening a screw.
   Connect the wires to the terminals on the control board individually as following.
2. Secure the cable onto the control board with the holder (clamper).
3. Refix the cover control to the original position with the screw.

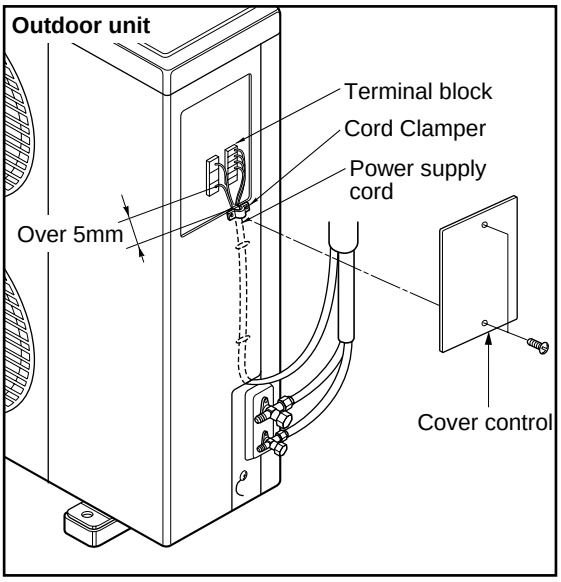

CAUTION

After the confirmation of the above conditions, prepare the wiring as follows:

1) Never fail to have an individual power specialized for the air conditioner. As for the method of wiring, be guided by the circuit diagram pasted on the inside of control box cover.

2) Provide a circuit breaker switch between power source and the unit.

3) The screw which fasten the wiring in the casing of electrical fittings are liable to come loose from vibrations to which the unit is subjected during the course of transportation. Check them and make sure that they are all tightly fastened. (If they are loose, it could give rise to burn-out of the wires.)

4) Specification of power source

5) Confirm that electrical capacity is sufficient.

6) Be sure that the starting voltage is maintained at more than 90 percent of the rated voltage marked on the name plate.

7) Confirm that the cable thickness is as specified in the power sources specification.
(Particularly note the relation between cable length and thickness.)

8) Never fail to equip a leakage breaker where it is wet or moist.

9) The following troubles would be caused by voltage drop-down.

- Vibration of a magnetic switch, damage on the contact point there of, fuse breaking, disturbance to the normal function of a overload protection device.
- Proper starting power is not given to the compressor.

For VC/VD Chassis Model

ON/OFF
Press button to set timer mode.

HOUR BUTTON
Press button to increase the time 1 hour in each step (24 hours).

MINUTE BUTTON
Press button to increase the time 10 minutes in each step in timer mode and 1 minute in each step in real time clock.

WARM BUTTON
Press button to increase temperature 1°C in each step (Max. 30°C).

COOL BUTTON
Press button to decrease temperature 1°C in each step (Min. 15°C).

SWING BUTTON
Air distributor in all modes.

SLEEP BUTTON
Sleep mode will automatically adjust temperature and save energy when you are sleeping.

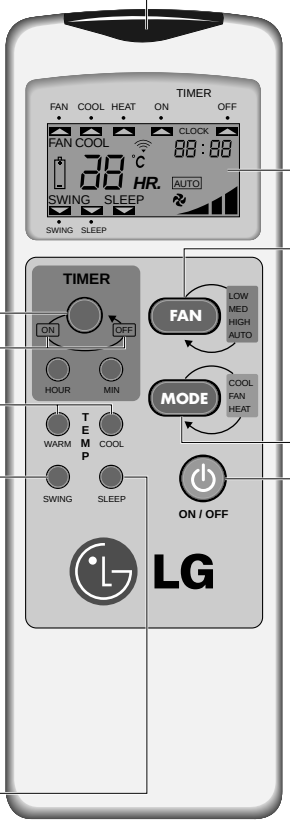

TRANSMISSION SOURCE
Used for sending control signal to the air conditioning unit.

LCD DISPLAY

FAN BUTTON
Press button to select low, Medium, High or Auto speed.

MODE BUTTON
Press button to select Cool, Fan or Heat mode.

ON/OFF BUTTON
Pressing this button will turn the air-conditioning unit on or off.

LCD DISPLAYS

MODE
FAN, COOL, HEAT

SIGNAL SENDING

SET TEMP

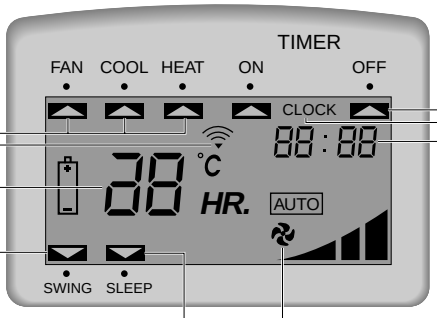

TIMER ON/OFF

CLOCK

HOUR & MINUTE

SWING

SLEEP

FAN SPEED
AUTO
LOW-MED-HI

Cooling Only Model(18k, 24k, 28k)

Signal transmitter

Transmits the signals
to the room air conditioner.

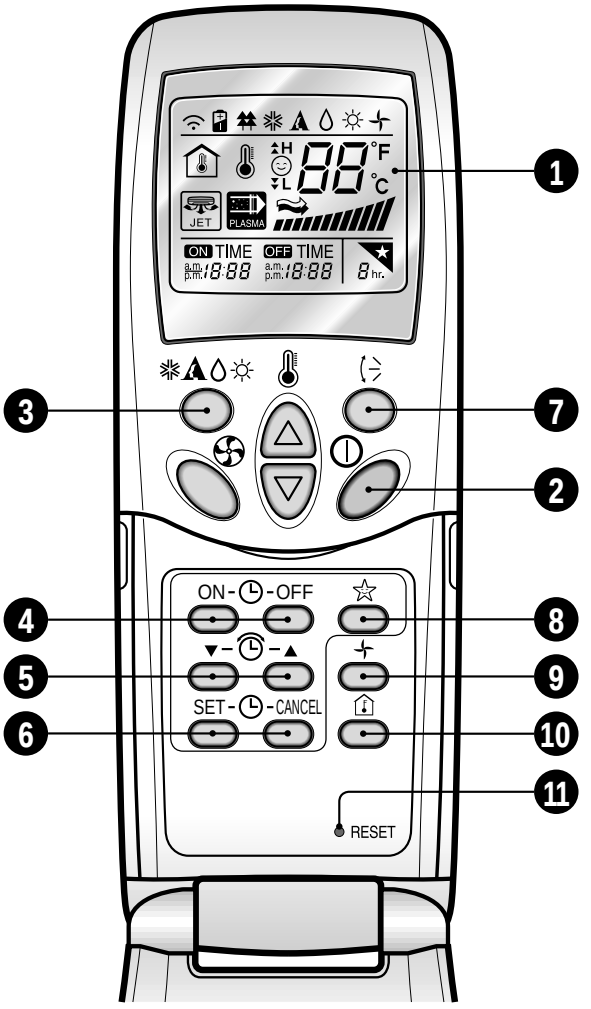

1 OPERATION DISPLAY

Displays the operation conditions.

2 START/STOP BUTTON

Operation starts when this button is pressed and stops when the button is pressed again.

3 OPERATION MODE SELECTION BUTTON

Used to select the operation mode.

4 ON/OFF TIMER BUTTONS

Used to set the time of starting and stopping operation.

5 TIME SETTING BUTTONS

Used to adjust the time.

6 TIMER SET/CANCEL BUTTONS

Used to set the timer when the desired time is obtained and to cancel the Timer operation.

7 AIR FLOW DIRECTION START/STOP BUTTON

Used to stop or start louver movement and set the desired up/down airflow direction.

8 SLEEP MODE AUTO BUTTON

Used to set Sleep Mode Auto operation.

9 AIR CIRCULATION BUTTON

Used to circulate the room air without cooling or heating (turns indoor fan on/off).

10 ROOM TEMPERATURE CHECKING BUTTON

Used to check the room temperature.

11 RESET BUTTON

Used prior to resetting time or after replacing batteries.

Heat Pump Model (18k, 24k, 28k)

Signal transmitter

Transmits the signals
to the room air conditioner.

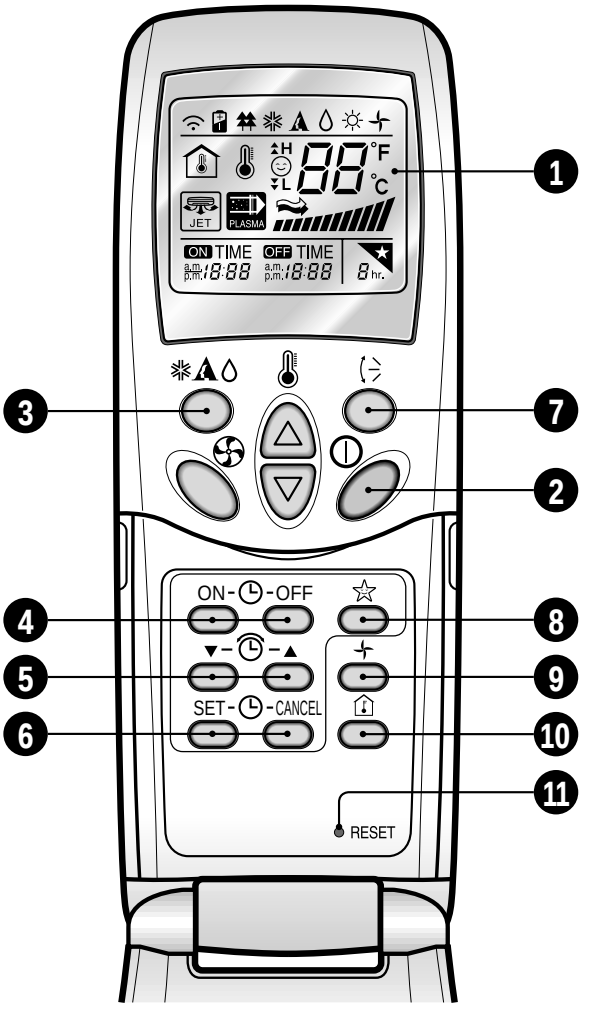

1 OPERATION DISPLAY
Displays the operation conditions.

2 START/STOP BUTTON
Operation starts when this button is pressed and stops when the button is pressed again.

3 OPERATION MODE SELECTION BUTTON
Used to select the operation mode.

4 ON/OFF TIMER BUTTONS
Used to set the time of starting and stopping operation.

5 TIME SETTING BUTTONS
Used to adjust the time.

6 TIMER SET/CANCEL BUTTONS
Used to set the timer when the desired time is obtained and to cancel the Timer operation.

7 AIR FLOW DIRECTION START/STOP BUTTON
Used to stop or start louver movement and set the desired up/down airflow direction.

8 SLEEP MODE AUTO BUTTON
Used to set Sleep Mode Auto operation.

9 AIR CIRCULATION BUTTON
Used to circulate the room air without cooling or heating (turns indoor fan on/off).

10 ROOM TEMPERATURE CHECKING BUTTON
Used to check the room temperature.

11 RESET BUTTON
Used prior to resetting time or after replacing batteries.

16. Function of Remote Controller

For VK/VL Chassis Models

The remote control transmits the signals to the system.

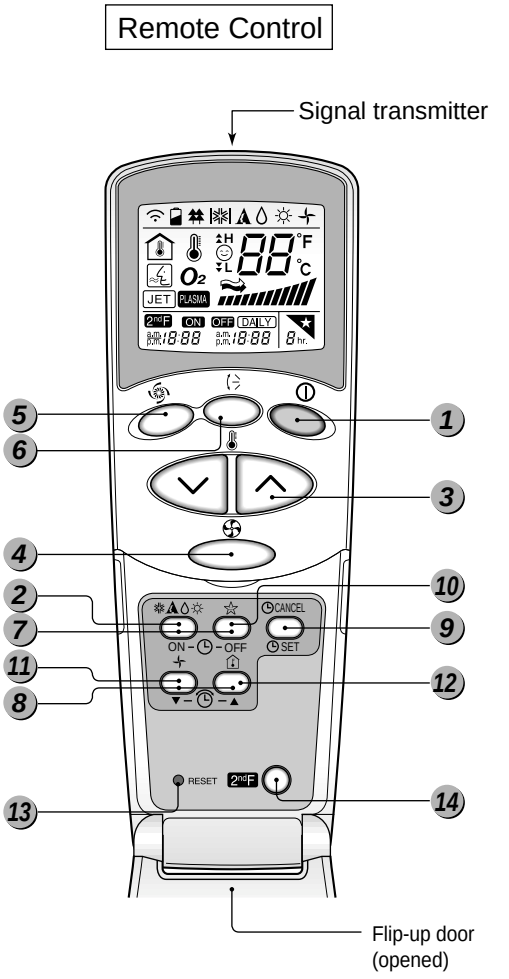

Operation Mode

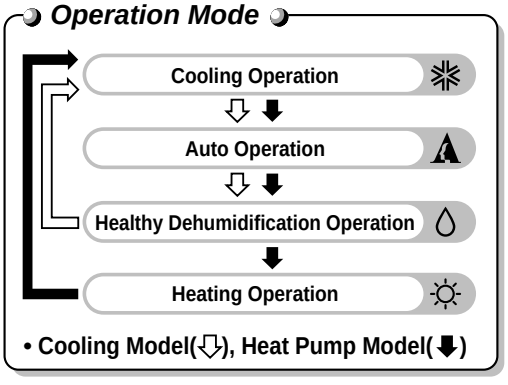

1 START/STOP BUTTON
Operation starts when this button is pressed and stops when the button is pressed again.

2 OPERATION MODE SELECTION BUTTON
Used to select the operation mode.
(Heat Pump) (Cooling Only)

3 ROOM TEMPERATURE SETTING BUTTONS
Used to select the room temperature.

4 INDOOR FAN SPEED SELECTOR
Used to select fan speed in four steps low, medium, high and CHAOS.

5 JET COOL
Used to start or stop the speed cooling/heating. (Speed cooling/heating operates super high fan speed.)

6 CHAOS SWING BUTTON
Used to stop or start louver movement and set the desired up/down airflow direction.

7 ON/OFF TIMER BUTTONS
Used to set the time of starting and stopping operation.

8 TIME SETTING BUTTONS
Used to adjust the time.

9 TIMER SET/CANCEL BUTTON
Used to set the timer when the desired time is obtained and to cancel the Timer operation.

10 SLEEP MODE AUTO BUTTON
Used to set Sleep Mode Auto operation.

11 AIR CIRCULATION BUTTON
Used to circulate the room air without cooling or heating.

12 ROOM TEMPERATURE CHECKING BUTTON
Used to check the room temperature.

13 RESET BUTTON
Initialize remote controller.

14 2nd F Button
Used prior to using modes printed in blue at the bottom of buttons.

LG Electronics Inc.

20 Yoido-dong, Youngdungpo-gu, Yoido P.O.Box 355
Seoul 150-721, Korea
Phone: 3777-7969 Fax: 3777-5137/8
http://www.lge.com

Approvals:

EN ISO 9001

BS EN ISO 9001

ANSI/ASQC Q9001

KS A 9001

P/No.: 3828A20429N

For continual product development, LG reserves the right to change specifications without notice
©LG Electronics INC. Printed in Korea. February/2006